City of Rochester
Department of Finance
City Hall Room 105A, 30 Church Street
Rochester, New York 14614-1281
www.cityofrochester.gov

one city ROCHESTER Bureau of Purchasing

_____
PRINTED NAME OF BIDDER

STREET LIGHTING MAINTENANCE - ELECTRICAL

Invitation to Bid No. 119960 Issued: Monday, April 30, 2012

PURCHASING BUREAU CONTACT: Roslyn Phillips, Purchaser, 585-428-7042

Sealed bids are to be returned to the Office of the Purchasing Agent, City Hall Room 105A, Rochester, NY 14614, prior to bid opening, at which time and place all bids will be opened, read and recorded.

PRE-BID: Monday, May 7, 2012 at 9:30 a.m., at City Hall, Room 300B, Rochester, NY 14613

BID OPENING: Monday, May 14, 2012 at 11:00 AM

The bidder's attention is directed to the General Conditions and Instructions to Bidders which appears immediately following this title page and is incorporated into the bidding document and contract by reference.

CONTRACT CHARACTERISTICS
(For definitions or explanations, see General Conditions)

Type of Contract: FIXED PRICE, 12 MONTH INITIAL TERM WITH OPTION TO EXTEND

Bid Deposit Requirement: 5% of TOTAL BID PRICE

Performance Security Requirement: 100% of CONTRACT TOTAL

Insurance Requirement: YES, SEE SECTION 40

Samples Requirement: SUBMIT ON ALTERNATES

Descriptive Literature/Technical Data Requirement: SUBMIT ON ALTERNATES

BIDDERS: Please note that prices, company identification and authorized signature are to be entered on the Proposal which appears at the end of the specifications.

STREET LIGHTING MAINTENANCE - ELECTRICAL

1. SCOPE

1.1 INTENT

To obtain the services of an electrical contractor with sufficient qualified licensed master electricians who will provide the necessary expertise to:

1.1.1 Insure the proper operation of the City's Street Lighting System.

1.1.2 To perform all necessary electrical work in conjunction with assigned City Street Projects.

1.1.3 To provide the necessary expertise to address any unanticipated electrical needs during the contract period.

1.2 LIGHTING SYSTEM DESCRIPTION

The City of Rochester owns and maintains the streetlights in the City. The system consists of 28,000 lights on Residential & Arterial Streets, Parking Lots, Parks and Plazas..

120-volt series circuits
Primarily individually photocontrolled

Light Source Types:

Over 86% High Pressure Sodium, 10% Mercury Vapor, 1.5% Metal Halide. Balance consists of fluorescent, incandescent, induction, LED and metal handle

Structure Types:

- 1/3 Wood Poles
- 1/3 Fiberglass Poles
- 1/3 Steel or Other

Facility Types:

1-3" PVC, steel conduit and innerduct
Fiberglass, concrete and brick handholes and pullboxes
Majority of circuits are #6 copper cable with #10 in poles and arms. Other cable configurations include copper or aluminum, #4 triplex and #2

1.3 MAINTENANCE RESPONSIBILITIES

The contractor shall perform regular system maintenance in response to City-issued work orders. Typical system maintenance items shall include, but not be limited to, the following:

1.3.1 Pole Repairs/Replacement/Installation

A. Replacement of damaged or knocked-down pole/new pole installation.

1. Pole and/or luminaire replacement/installation.
2. Emergency cleanup of pole knockdown area and removal of debris and damaged material.
3. Adjustment of pole and/or adjustment of luminaires.

1.3.2 Electrical Repairs

A. Repair of non-functioning or malfunctioning luminaire.

1. Lamp cycling (On & Off)
2. Lamp constantly burning (Dayburner)
3. Lamp not burning
   a. Due to lamp failure
   b. Due to malfunctioning or defective luminaire component(s).
4. Repair/replacement of in-line disconnecting device.
5. Repair/replacement of damaged or defective cable.

1.3.3 Underground Facilities Repair

A. Repair or replacement of damaged conduit.

B. Repair or replacement of damaged conduit and cables.

C. Repair or replacement of damaged pole base.

D. Reset of "tipped" pole base

E. Repair or replacement of handhole or pullbox.

F. Repair or replacement of handhole cover or pullbox cover.

G. Anchor rod repair.

1.3.4 Underground Facilities Relocation/Installation

A. Relocation/Installation of conduit and/or cable.

B. Relocation/Installation of handhole or pullbox.

C. Relocation/Installation of pole base.

D. Installation, replacement or removal or bollards.

1.3.5 Overhead Facilities Repair/Installation

A. Repair/Install overhead cable and related hardware.

B. Repair/Install mast arm and related hardware.

2. SPECIAL CONDITIONS

2.1 NOTIFICATION TO CONTRACTOR OF WORK TO BE PERFORMED

The City will generally notify the contractor of routine malfunctions once a day @ 7 a.m. Each reported malfunction would be identified with a work order number. All work orders will indicate date and time the work order was called in to the contractor.

2.1.1 Routine Malfunction/Repair

All reported malfunctions should be considered routine unless specified as non-routine or emergency by the City.

2.1.2 Emergency Malfunction/Repair

The City will notify the Contractor immediately of emergency malfunctions. Criterion for classifying a malfunction as an emergency will be any hazardous condition or any situation that will create or prolong a partial or entire circuit outage, as determined by the City.

2.1.3 Non-Routine Malfunctions/Repairs

The City shall notify the Contractor as soon as possible of a non-routine malfunction/repair. Non-routine malfunctions/repairs pose the possibility of a hazard if not responded to in a timely fashion, i.e., a missing pullbox cover.

2.1.4 Project-related Work

The City may require that the Contractor install new street lighting equipment and/or remove old street lighting equipment in conjunction with a street or underpass improvement project or as a street lighting improvement project. The City and the Contractor shall schedule such work to coordinate with the improvement project's schedule.

2.2 TELEPHONE NUMBERS TO BE PROVIDED

The Contractor shall provide the City with a voice telephone number as well as a an e-mail address to notify the Contractor of service to be performed between the hours of 7:30 a.m. and 4:30 p.m., Monday through Friday. An emergency telephone number shall be provided for notification after normal working hours.

2.3 NOTIFICATION TO CITY OF WORK ORDER STATUS

2.3.1 The Contractor will notify the City when, for any reason, an issued work order cannot be completed within the required response time (see paragraph 2.4).

2.3.2 The Contractor will notify the City within the required response time (see paragraph 2.4) when an issued work order tests OK or the reported function cannot be identified. (i.e., the issued work order does not result in a repair.).

A. The contractor shall also notify the City of anything relating to the condition of the base, pole, luminaire or the surrounding area that may require other work or City inspection (i.e., tipped pole base, tree trimming required, etc.).

2.3.3 After completing a work order requested by the City, the Contractor shall, on the form designed by the City, (Attachment A) indicate the work order number; location of repair; date and time repair was requested and performed; description of work performed; City supplied materials used; labor and materials billed; and signature of repairman.

A. The Contractor shall note on the completed work order anything relating to the condition of the base, pole, luminaire or the surrounding area which may require additional work or City inspection (i.e., tree trimming, tipped base, etc.).

B. The Contractor shall note the date a lamp is installed by marking the installation month and year on the lamp base. The Contractor shall note the date a photocontrol is installed by marking the installation month and year on the photocontrol.

2.4 REQUIRED RESPONSE TIME

Most work under this contract shall be performed between the hours of 7:30 a.m. and 4:30 p.m., Monday through Friday. Work on Saturdays, Sundays, and official City of Rochester holidays is not generally required and should not be considered when computing response time requirements.

2.4.1 All routine repairs (work under paragraph 2.1.1) called in prior to noon (12:00 p.m.) shall be completed by end of the next business day.

2.4.2 All routine repairs (work under paragraph 2.1.1) called in after 12:00 p.m. shall be completed by the end of two full business days.

2.4.3 All emergency malfunctions/repairs (work under paragraph 2.1.2) to be responded to within one (1) hour of notification and work must be completed by the end of that business day unless an extension of time is granted by the City.

2.4.4 All non-routine malfunctions/repairs (work under paragraph 2.1.3) to be responded to within two (2) hours of notification and work must be completed by the end of that business day unless an extension of time is granted by the City.

2.4.5 All project related work shall be completed within the period established by the City for each work order issued. The Contractor shall provide schematic wiring diagrams and quantities of cables and fuses installed for each project completed, and submitted with completed work orders.

2.5 FAILURE TO RESPOND

2.5.1 Failure to comply with the requirements of 2.4.1 through 2.4.5 shall subject the contractor to liability for liquidated damages as set forth in Section 2.7.

2.5.2 In the event that the Contractor does not perform the work within the required response time, the City will take action to assure that the work is completed. The contractor shall be liable for any excess costs incurred by the City in securing the performance of the work.

A. In the event that the contract is cancelled for failure to perform as specified, the City will secure the services of another contractor and the defaulting contractor shall be liable for any excess costs incurred by the City through the balance of the term of the contract.

2.6 PROTECTION OF UTILITIES

2.6.1 In accordance with New York State Code 753, the Contractor shall give the various utility owning companies at least 48 hours notice before doing any work that may interfere with their operation.

2.6.2 The Contractor shall assume all costs for repairs or replacement of utilities damaged through negligence of the contractor. This work shall be done to the satisfaction of the owning utility and the Street Lighting Division.

2.7 LIQUIDATED DAMAGES

2.7.1 In entering a bid, the Contractor acknowledges that time is of the essence in the performance of the work of this contract. The completion requirements set forth under "Required Response Times" must be complied with.

2.7.2 It is further agreed that by the nature of the work to be performed under this contract, the City will suffer damage as a consequence of any failure to complete work orders within the time allowed, but that such damage is not calculable.

2.7.3 The Contractor hereby agrees therefore, that liquidated damages of Ten ($10) Dollars per calendar day per work order shall be assessed for any work order not completed within the required time period with the exception of non-routine work where liquidated damages of Twenty-five ($25) Dollars per calendar day per work order shall be assessed for any work order not completed within the established time period.

2.7.4 Liquidated damaged assessed shall be retained from payments due the Contractor for work under this contract or payments due the Contractor for any other reason.

2.8 INSPECTION

2.8.1 RESPONSIBILITY OF THE STREET LIGHTING DIVISION AND THE CONTRACTOR

All work under this contract shall be subject to continuous inspection by a project representative from the Street Lighting Division. This inspection shall not relieve the contractor of the responsibility to furnish material and perform work in accordance with the standard specifications, the supplementary specifications and the special conditions.

2.8.2 FREE ACCESS

The project representative shall have free access to all job sites and all other areas used by the Contractor in the performance of this contract. The Contractor shall assist the project representative in obtaining information regarding all construction and materials used in the performance of this contract.

2.8.3 COMPLETED WORK

When all work assigned during the monthly billing period has been completed, the Contractor shall submit an application for payment. (See Monthly Billing, Section 2.12.)

A. Project and Non-Routine Work

The project representative shall give the work a thorough inspection. The Contractor shall assist the project representative with the inspection when required. Before payment is made, any defects or omissions in the work performed, which are noted in this inspection, must be corrected to the satisfaction of the project manager without additional compensation to the Contractor.

2.9 QUALIFICATION OF WORKERS

2.9.1 All work shall be performed by qualified workers skilled in their respective trades. All electrical connections shall be installed by Master Electricians duly licensed in accordance with the Electrical Licensing Ordinance of the City of Rochester.

A. Licensed Master Electricians

The Contractor shall have a minimum of three (3) licensed master electricians to perform work related to this contract. One of the three licensed master electricians shall be assigned full time to diagnose and repair the maintenance items under this contract. A second licensed master electrician shall be assigned to perform project related work under this contract. The Contractor shall include the names of the electricians assigned to the maintenance items and project related work as well as a copy of each electrician's license as part of the bid package for this contract.

The master electrician assigned to perform the project related work under this project shall act as a project superintendent in accordance with Article 6 of the City's Standard Construction Contract Documents.

B. Line Truck Crane Operator Certification

Metal/wood pole installation work shall be performed by qualified workers licensed by NYSDOL with a Line Truck Crane Operator Certification. The Contractor shall have a minimum of two (2) line truck crane operators and include the names of said operators assigned to this work as well as a copy of each operator's license as part of the bid package for this contract.

2.10 MAINTENANCE AND PROTECTION OF PUBLIC SAFETY

The Contractor shall take all appropriate safety measures and must have and use flashers on any motor vehicle used during the course of City business. The City is not liable for any injuries or accidents occurring during the performance of City business. The Contractor shall conduct all operations related to this contract according to Articles 6.9 and 6.11 of the General Conditions contained in the City's Standard Construction Contract Documents.

2.11 USE OF SUBCONTRACTORS

The use of subcontractors may be permitted by the City, subject to all requirements in Article 6.4 of the General Conditions contained in the City's Standard Construction Contract Documents.

2.12 MONTHLY BILLING

2.12.1 The Contractor shall bill the City monthly for services performed on a standard City claim voucher and submit it to:

City of Rochester
Street Lighting Program Coordinator
30 Church Street, Room 012A
Rochester, New York 14613

2.12.2 The Contractor shall submit the completed work order forms to the City with the monthly bill.

A. A summary shall accompany the work order forms (see Attachment D).

B. For each work order, the summary shall list:

1. Work order number, in ascending order;

2. Location of the repair performed;

3. Labor cost billed;

4. Material cost billed; and

5. Total cost for each work order.

C The summary shall provide totals for labor and materials.

D. A listing of work orders issued during the month but not billed and the status of each work order shall be provided monthly.

2.12.3 Failure to submit bills in accordance with these requirements shall relieve the City of obligation to pay the bills on a timely basis.

2.12.4 Completed work orders to be submitted for payment as follows:

A. Routine and Non-Routine Maintenance

All routine and non-routine maintenance work orders for each month will be submitted for payment within fifteen (15) days of the end of that month.

B. Project Related Work

All project related work shall be issued to allow for separate monthly billing for payment within fifteen (15) days of the end of that month.

2.13 REPEAT CALLS

The City reserves the right to refuse payment to the Contractor for a repeat call to the same location within a thirty (30) day period.

3. PRE-BID CONFERENCE

A Pre-Bid Conference will be held Monday, May 7, 2012 at 9:30 a.m. at City Hall, Room 300B, Rochester, NY 14614. All bidders are strongly urged to attend.

4. METHOD OF AWARD

The contract shall be awarded to the lowest responsive and responsible bidder based on Total Bid Price.

5. CONTRACT TERM

5.1 The term of the contract resulting from this Bid Invitation shall commence on Date of award and end June 30, 2013.

5.2 Upon mutual agreement of the contracting parties, the contract may be extended for up to three (3) additional years, in one year increments, upon a mutual agreement between the City and the contractor.

6. MATERIALS

6.1 CITY SUPPLIED MATERIALS

6.1.1 The City of Rochester shall provide the Contractor with the following replacement materials;

A. Poles

B. Lamps

C. Photocontrols

D. Luminaires

E. Luminaire replacement parts (ballasts, capacitors, starters, sockets, gaskets, refractors, resistors, photocontrol receptacles, and other hardware)

F. Handholes, pullboxes, handheld adjustment spacers, metal spikes and washers

G. Pole base hardware (anchor bolts, nuts, and washers)

6.1.2 The City of Rochester may supply the following materials:

A. Wood Poles

B. 2 x 2 metal frames and covers

C. #4 cable (triplex)

D. Reflective pole numbers

E. Pre-cast concrete pole bases

F. Fuse Holders and/or Fuses

6.1.3 The City shall issue the Contractor sufficient quantities of City-supplied materials at the start of the contract period. Defective/broken materials shall be returned to the City for replacement.

6.1.4 The City reserves the right to require the Contractor to give at least twenty-four (24) hours notice when the Contractor requests, or returns, City-issued materials.

6.1.5 The Contractor shall store all materials supplied under this contract in accordance with Article 6.2.6 of the General Conditions contained in the City's Standard Construction Contract Documents.

6.2 CONTRACTOR SUPPLIED MATERIALS

The Contractor shall provide all other materials in accordance with the following requirements:

6.2.1 2" or 3" CONDUIT (PAY ITEMS 38a, 38b, 38c, 38d)

A. The conduit and fittings used shall be Schedule 40, rigid, heavy wall polyvinyl chloride (PVC) conduit as specified by the Underwriters Laboratories Standard UL-651. The conduit is to meet the specifications included in NEMA Standard Specification TC-2 for electrical plastic conduit EPC-40.

Conduits and fittings used for riser conduit connections are to be Schedule 80, rigid, extra-heavy wall polyvinyl chloride (PVC) as specified by the Underwriters Laboratories Standard UL-651. The conduit is to meet the specifications included in NEMA Standard Specification TC-2 for electrical plastic conduit EPC-80.

(1) In cases of conflicting test requirements, the more stringent of the two specifications will be required.

B. Galvanized steel conduit may be specified to be used for roadway crossings. The galvanized steel conduit shall conform to the requirements of NYSDOT Section 723-20.

6.2.2 WARNING TAPE

The red warning tape shall be marked "CAUTION ELECTRICAL CABLE" manufactured by Allen System, Inc. or approved equivalent.

6.2.3 CABLE IN CONDUIT #2, #6 (PAY ITEMS 39a, 39c)

The cables in conduit shall be single conductor No. 2 AWG or 6 AWG stranded copper conductor, type THWN color coded, continuously colored red/white/black/green. The cables shall be flame-retardant, moisture and heat resistant and contain thermoplastic insulation and a nylon jacket. The cables shall be approved for use in wet or dry locations and up to 75°C or approved equivalent. The number and color of cable used shall be as directed by the City.

6.2.4 OVERHEAD CABLE #4 (TRIPLEX) (PAY ITEM 40)

The overhead cable #4 (triplex) shall be two #4 aluminum with .045" black polyethylene insulation and one #4 ACSR bane messenger, in accordance with ASTM B-232 and supplied with all necessary hardware and fittings.

6.2.5 CABLE IN THE POLE (PAY ITEM 39b)

The cables in the pole shall be single conductor No. 10 AWG standard copper conductor, type THWN color coded, and continuously colored red/white/black. The cables shall be flame-retardant, moisture and heat resistant and contain thermoplastic insulation and a nylon jacket. The cables shall be approved for use in wet or dry locations and up to 75°C or approved equivalent. The number and color of cable shall be as directed by the City.

6.2.6 CONNECTOR (PAY ITEM 34)

The bolt connectors shall be Burndy copper split bolt connector Catalog No. KS20 or approved equivalent.

6.2.7 BREAKAWAY FUSE HOLDER - TYPE KTK FUSE (PAY ITEM 35a)

The fuse holder shall be Tron In-line fuse holder HEB-BW-RLC-B with two Buss insulating boots L type No. 1A0512 or approved equivalent.

6.2.7 NON-BREAKAWAY FUSE HOLDER - TYPE KTK FUSE (PAY ITEM 35b)

The fuse holder shall be Tron In-line fuse holder HEB-BB with two Buss insulating boots L type No. 1A0512 or approved equivalent.

6.2.8 BREAKAWAY FUSE HOLDER - TYPE SC FUSE (PAY ITEM 35c)

The fuse holder shall be Tron In-Line fuse holder HEJ-BW-RLC-B with two Buss insulating boots L type No. 1A0512 or approved equivalent.

6.2.9 FUSE - TYPE KTK (PAY ITEM 36a)

The fuse shall be Buss fuse type KTK (current-limiting type) 13/32 x 1-1/2 or approved equivalent. Replacement fuses shall be of the same amperage as the fuse(s) removed, or as directed by the City.

6.2.10 FUSE - TYPE SC (PAY ITEM 36b)

The fuse shall be Buss fuse type SC (current-limiting type) 13/32 x 2-1/4 or approved equivalent. Replacement fuses shall be of the same amperage as the fuse(s) removed, or as directed by the City.

6.2.11 WOOD POLE (PAY ITEMS 41a, 41b)

The wood poles used for City Street Lighting purposes shall be treated pine Class 4 (35') or Class 3 (45').

6.2.12 REFLECTIVE LIGHT AND POLE ID NUMBERS (PAY ITEM 42)

ID Numbers 3M #5271 "Scotch Lite", or approved equivalent, black or green label - 1-3/4" wide x 2-7/8" high. Yellow or white reflective numbers

- 1-3/8" wide x 2-1/2" high with clear varnish over lamination and cold temperature adhesive.

6.2.13 CONCRETE POLE BASE

The concrete pole base shall be constructed as indicated on the attached standard drawings. The necessary bolts, nuts, and washers shall be supplied by the City.

6.2.14 BOLLARD

Concrete shall conform to the requirements of NYSDOT, Section 501, for Class A Concrete. Posts shall have the minimum dimensions as indicated on the attached detail sheet (Attachment E). Posts shall be new galvanized steel pipe with standard acorn caps. Post and cap shall be primed with Rustoleum Bare Metal Primer and painted with Rustoleum Flat Black Paint. Gravel, Type 1, shall meet the requirements of NYSDOT, Section 304-2.

6.2.15 CAPSULE ANCHOR (PAY ITEM 37)

The capsule anchors shall be Molly ParaBond Capsule Anchor, Catalog No. M16-58, or approved equivalent.

6.2.16 2' x 2' CONCRETE PULL BOX – 30" DEEP (PAY ITEM 44a) – 36" DEEP (PAY ITEM 44b)

6.3 CONTRACTORS MATERIAL SUPPLY REQUIREMENTS

The Contractor shall be responsible for maintaining an adequate supply of materials on hand to enable the Contractor to meet the response time requirements for the entire period of the contract.

6.3.1 City-issued materials which prove to be defective or broken shall be returned to the City in exchange for replacement materials well enough in advance as to insure performance of the contract within the requirements set forth in paragraphs 2.4.1 through 2.4.4.

6.3.2 The Contractor shall be responsible for disposal of unsalvageable materials resulting from excavation or in response to pole knockdowns/ replacements.

6.4 ALTERNATE MATERIALS TO BE APPROVED BY THE CITY

If the bidder proposes alternates to the materials specified herein, shop drawings and samples of the materials must be submitted with the bid. No materials shall be used in the performance of this contract without the prior written approval of the City of Rochester.

7. ANCHOR BASE FIBERGLASS POLE AND LUMINAIRE INSTALL/REMOVE
(PAY ITEMS 4a, 4c, 21a, 21b)

ANCHOR BASE METAL POLE AND LUMINAIRE INSTALL/REMOVE
(PAY ITEMS 4b, 4d, 21c 21d, 21e)

2-PIECE SHROUD REPLACEMENT (PAY ITEM 11c)

POLE ACCESS DOOR REPLACEMENT (PAY ITEM 11d)

7.1 The Contractor shall replace all damaged City-owned poles and luminaires at the direction of the City within the time requirements set forth in paragraphs 2.4.1 through 2.4.4. Work required may include:

7.1.1 Picking up a new pole from City warehouse and/or yard, setting a new pole on its concrete foundation and assuring that the pole is vertical and plumb. Any shimming of the pole must be approved in advance and performed at the direction of the Street Lighting Division. All poles must be handled carefully utilizing strapping or City-approved alternative to prevent pole scratching or denting.

7.1.2 Wiring the pole and luminaire.

7.1.3 Placing and orienting the luminaire.

7.1.4 Installing new lamp with the installation date marked using the coding provided on the lamp.

7.1.5 Installing and correctly orienting new photocontrol with the installation date marked using the coding provided on the photocontrol.

7.1.6 Attaching the shroud to the pole base.

7.1.7 Assuring that the pole and luminaire are installed and functioning properly.

7.1.8 Returning pole, fixture and related equipment to City warehouse and or yard; or disposal of pole as approved by the City.

7.1.9 Adhering light and pole ID #s in accordance with City requirements.

7.2 Payment shall include all labor and equipment necessary to the installation.

7.2.1 As part of this pay item, the Contractor shall supply incidental hardware not covered by material pay items.

7.2.2 The City shall provide all materials except the wires and associated hardware. Materials provided by the Contractor shall be paid for under specific material items as bid herein.

8. EMERGENCY CLEANUP OF POLE KNOCKDOWN (PAY ITEMS 3a, 3b, 3c, 3d)

The Contractor shall clean up and secure the knockdown areas at the direction of the City within the time requirements set forth in Section 2.4.2. Work required may include:

8.1 Making the area safe by securing live electrical wires.

8.2 Placing a safety cone or other appropriate warning device if the pole is not replaced immediately.

8.3 Clearing the site and disposing of broken glass and debris.

8.4 Disposing of pole and returning fixture to City warehouse.

8.5 Return damaged metal pole and fixture to City facilities.

8.6 Obtaining and supplying to the City all information possible to help identify the individual responsible for the knockdown. Such information may include: Auto insurance company, driver's license, auto license, etc.

8.7 Notifying the City of serious accident or damage to other City property.

8.8 Notifying the City that work is complete.

8.9 The Contractor shall be paid on the basis of the number of emergency cleanups performed. Payment shall include all labor and materials necessary to perform the emergency cleanups.

9. CIRCUIT OUTAGE REPAIR (PAY ITEM 2)

9.1 A circuit outage shall be defined as the malfunction of a circuit, sub-circuit, or portion of a circuit. Exception: Fuse Holder and/or Fuse replacement at the location of an individual overhead fed light where the fuse is located on the same wood pole as the light shall be paid under a Luminaire Malfunction Repair. A circuit outage may result from damage to underground facilities, a pole knockdown, faulty wiring, or a blown fuse.

9.2 The Contractor shall repair all circuit outages as directed by the City within the time requirements set forth in paragraph 2.4.2.

9.3 The Contractor shall be paid on the basis of the number of circuit outages repaired. Payment shall include all labor, equipment, and materials necessary to repair the circuit outage.

9.4 In the event that the circuit outage is a result of a pole knockdown and/or damage to underground facilities payment of the repair will be made under the following pay items: Reset pole base, conduit replacement, cable replacement or pole and luminaire replacement.

10. LUMINAIRE MALFUNCTION REPAIR (PAY ITEM 1a)

GROUP FIXTURE REPLACEMENT (PAY ITEM 19c)

UTILITY LUMINAIRE INSTALL/REMOVE (PAY ITEM 1b)

DECORATIVE LUMINAIRE INSTALL/REMOVE (PAY ITEM 1c)

LUMINAIRE REBUILDING (PAY ITEM 1e)

10.1 A luminaire malfunction shall be defined as any luminaire or component requiring repair, rebuild, replacement or adjustment. Work under this item will include refractor/reflector/shield cleaning and any one or more of the following as appropriate to insure the luminaire is in proper working order.

10.1.1 Lamp replacement

10.1.2 Photocontrol adjustment or replacement

10.1.3 Refractor replacement

10.1.4 Luminaire alignment/replacement/installation

10.1.5 Starting aid, ballast, or capacitor replacement

10.1.6 Rebuilding of luminaire damaged by a pole knockdown.

10.1.7 Lubrication of the luminaire gasket when necessary.

10.1.8 Replacement of luminaire arm if broken.

10.1.9 Adhering light/pole ID number in accordance with City requirements.

10.1.10 Fuse Holder and/or Fuse replacement at the location of an individual overhead fed light where the fuse is located on the same wood pole as the light.

10.2 The Contractor shall repair all malfunctioning luminaires at the direction of the City within the time requirements set forth in paragraph 2.4.1.

10.3 The Contractor shall be paid on the basis of the number of malfunctioning luminaires repaired. Payment shall include all labor, equipment and materials necessary to repair the malfunctioning luminaire.

10.3.1 The City shall provide all materials except the wires and associated hardware. Materials provided by the Contractor shall be paid for under specific material items as bid herein.

10.3.2 The City shall identify which luminaires are classified as Utility or Decorative Luminaires when a work order is issued.

11. STREET RELAMPING/LUMINAIRE UPGRADE (PAY ITEMS 1d)

11.1 The Contractor shall be required to relamp or replace fixtures on entire streets of specific City sectors at the direction of the City within the time requirements as set forth in paragraphs 2.4.1 through 2.4.4.

11.2 The Contractor shall be paid on the basis of the number of street lights relamped, or luminaries repaired or replaced. Payment shall include all labor, equipment and materials necessary to relamp or repair malfunctioning luminaries.

11.2.1 The City shall provide all materials except the wires and associated hardware. Materials provided by the Contractor shall be paid for under specific material items as bid herein.

11.3 Street Relamping shall be defined as repairing any luminaire on a specific street or streets within a specific sector of the City during a single contract period. There are five (5) Street Lighting Sectors within the City. Each contains approximately 2,000 street lights. The City plans on relamping approximately one sector during each contract period. Work under this item shall include the following, however if additional maintenance is required to insure proper maintenance, the Contractor shall be re-imbursed under a luminaire malfunction.

11.3.1 Lamp replacement

11.3.2 Refractor replacement, if necessary

11.3.3 Lens/refractor/reflector cleaning

11.3.4 Lubrication of the luminaire gasket when necessary

11.3.5 Adhering light/pole ID number in accordance with City requirements

11.3.6 Remove cupola and install new photo control.

12. FIBERGLASS POLE ADJUSTMENT (PAY ITEM 11a)

METAL POLE ADJUSTMENT (PAY ITEM 11b)

12.1 The Contractor shall plumb poles as directed by the City within the time requirements set forth in paragraph 2.4.1 through 2.4.4. Work required will involve shimming and/or adjusting the anchor bolts on the pole base as required to insure that the pole is vertical.

12.2 The Contractor shall be paid on the basis of the number of poles plumbed. This will include all labor and equipment necessary to plumb the pole.

13. FIBERGLASS HANDHOLE/PULLBOX COVER REPLACEMENT (PAY ITEM 26)

13.1 The Contractor shall replace handhole or pullbox covers at the direction of the City within the time requirements set forth in paragraph 2.4.1 through 2.4.4. A metal spike and washer shall be buried between the curb and the handhole or pullbox, if one does not already exist.

13.2 The Contractor shall be paid on the basis of the number of handhole and pullbox covers replaced. This will include all labor and equipment necessary to replace the covers.

14A. EXPERIMENTATION (PAY ITEM 12A)

14A.1 The City reserves the right to require the Contractor to perform electrical experimentation on the City street light system. The Contractor shall be required to begin the work within seventy-two (72) hours of, and to complete all work within one week of, the City's request.

14A.2 All work shall be paid for on the basis of the hourly rate of each person working and shall include equipment costs.

14A.3 Any incidental materials required for such experimentation and not provided by the City shall be billed at contractor's cost, as documented by bills or invoices.

14B. CONSULTATION (PAY ITEM 12B)

The City requires that the Contractor provide consultation services. This will requires the Contractor and the City to meet for approximately two (2) hours per month to discuss the following:

- inventory requirements for maintenance
- improvement suggestions
- persistent system problems

15. TROUBLESHOOTING (PAY ITEM 13)

15.1 When a street light maintenance problem arises that does not fall into the categories listed, the City may request the Contractor to investigate, correct, and report the problem. The Contractor shall complete work within the time requirements set forth in paragraphs 2.4.1 through 2.4.4.

15.2 All work performed shall be at the direction of the City and will be paid on the basis of the hourly rate of each person working and shall include equipment costs.

16. CONDUIT AND CABLE REPAIR/INSTALL WITH EXCAVATION
(PAY ITEM 5a, 5c, 14e, 14f)

CONDUIT AND CABLE REPAIR/INSTALL WITHOUT EXCAVATION
(PAY ITEM 5b, 5d, 14e, 14f)

16.1 The Contractor shall supply all labor and materials in order to repair all damaged conduit and cable and test the circuit to insure proper operation at the direction of the City within the time requirements set forth in paragraphs 2.4.1 through 2.4.4. The Contractor shall be paid on the basis of the number of conduit repairs responded to.

16.1.1 If the conduit repair requires cable replacement, the cable replacement shall be paid for under Pay Items 39a, 39b.

16.1.2 If the conduit repair does not require cable replacement, the Contractor shall routinely pull the existing wire out of the conduit, replace the conduit as necessary under Pay Items 38a, 38b, 38c, 38d and reinstall the cable.

16.2 Conduit install/replace with excavation pay item will include up to .5 cubic yards of excavation. If more excavation is required, the Contractor must obtain approval from the City and will be paid for additional excavation under City Pay Item 30a or 30b.

16.3 Payments shall include all labor and equipment necessary to install or replace the conduit. This includes cable removal and re-installation between junction points. For the fiberglass pole system this could include removing and reinstalling poles and fixtures.

16.4 Conduit and cable installed or repaired for connection to service point shall include all necessary hardware and materials.

17. CABLE FURNISH AND INSTALL (PAY ITEMS 17a, 17b, 17d)

17.1 The Contractor shall furnish and install new or remove and replace existing cable, test circuit and insure proper operation at the direction of the City within the time requirements set forth in paragraphs 2.4.1 through 2.4.4.

17.2 The Contractor shall be paid on the basis of linear feet of cable replaced and or installed. Payment shall include all labor, equipment, and materials necessary to replace or install the cable.

17.3 If the Contractor installs a new circuit or makes changes to an existing circuit, the Contractor shall supply the City with a wiring diagram.

18. OVERHEAD CABLE INSTALL/REMOVE WITH LIFT TRUCK (PAY ITEM 17c)

18.1 The Contractor shall install new or replace overhead cable #4 triplex with lift truck as required, test circuit and insure proper operation at the direction of the City within the time requirements set forth in paragraphs 2.4.1 through 2.4.4.

18.2 The Contractor shall be paid on the basis of linear foot of cable installed and/or removed cable. Payment shall include all labor, hardware, equipment and materials necessary to remove or install the cable.

18.2.1 Since the City has a supply of overhead cable #4 triplex, the Contractor shall obtain the #4 triplex cable for installation from the City. If #4 triplex cable is required for installation, payment for the cable shall be made under Pay Item No. 40.

19. SPLIT DUCT REPAIR (PAY ITEM 6a, 6b)

19.1 The Contractor shall, only with the specific direction of the City, repair damaged conduit, with or without excavation, with Split Duct and test the circuit to insure proper operation, within the time requirements set forth in paragraphs 2.4.1 through 2.4.4.

19.2 Split duct repairs shall be made in accordance with City specifications and the Contractor shall use Carlon Split Duct, (following manufacturer's installation guidelines) or an approved equivalent. Normal conduit repairs shall require use of 2" Split Duct, however, there may be instances where 3" Split Duct will be required. In either case, the cost of the Split Duct shall be considered as part of this item.

19.3 The Contractor shall be paid on the basis of each split duct repair made. Payment shall include all labor, equipment, material and accessories necessary to complete the repair.

20. CABLE REMOVE (PAY ITEMS 18a, 18b, 18c)

20.1 The Contractor shall remove existing cable from conduit at the direction of the City within the time requirements set forth in paragraph 2.4.1 through 2.4.4.

20.2 The Contractor shall deliver removed cable to City. Payment shall include all labor, equipment and materials necessary to remove cable. Payment shall be made on the basis of each order to remove cable.

21. POLE BASE RESET WITH EXCAVATION (PAY ITEM 27a)

POLE BASE RESET WITHOUT EXCAVATION (PAY ITEM 27b)

21.1 The Contractor shall reset all tipped bases, reinstall pole and unit, and test unit and circuit at the direction of the City within the time requirements set forth in paragraphs 2.4.1 through 2.4.4.

21.2 The Contractor shall be paid on the basis of the number of pole bases reset. Payment shall include all labor, equipment, and materials necessary to reset the base.

22. CONDUIT INSTALL/REPLACE WITH EXCAVATION: (2" PVC PAY ITEM 14a)
(2" STEEL PAY ITEM 14b)
(3" PVC PAY ITEM 14c)
(3" STEEL PAY ITEM 14d)

CONDUIT INSTALL/REPLACE WITHOUT EXCAVATION: (2" PVC PAY ITEM 15a)
(2" STEEL PAY ITEM 15b)
(3" PVC PAY ITEM 15c)
(3" STEEL PAY ITEM 15d)

22.1 The Contractor shall install or replace conduit, with or without excavation, and cable, and test the circuit to insure proper operation at the direction of the City within the time requirements set forth in paragraphs 2.4.1 through 2.4.4.

22.2 The Contractor shall be paid on the basis of linear feet of conduit installed or replaced. Payment shall include all labor, equipment, and material necessary to install or replace the conduit.

22.2.1 Cable furnished, installed, replaced in conjunction with this item shall be paid for under Pay Items 17a, 17b.

22.2.2 Excavation shall be paid under City Pay Item 30a and/or 30b.

23. INNER DUCT INSTALLATION (PAY ITEMS 16a, 16b, 16c)

23.1 The Contractor shall install all inner duct at the direction of the City, within the time requirements set forth in paragraphs 2.4.1 through 2.4.4.

23.2 The Contractor shall supply all labor, material, equipment and accessories necessary to install the inner duct and shall test the circuit to insure that the system is working properly.

23.3 The Contractor shall be paid on the basis of linear foot of inner duct installed. Payment shall include all labor, materials, equipment and accessories necessary to install the inner duct.

24. PRECAST/POURED-IN-PLACE POLE BASE INSTALLATION WITH EXCAVATION (PAY ITEM 24a)

PRECAST/POURED-IN-PLACE POLE BASE INSTALLATION WITHOUT EXCAVATION (PAY ITEMS 24b)

24.1 The Contractor shall install all indicated pole bases, install poles and unit, and test unit and circuit at the direction of the City within the time requirements set forth in paragraphs 2.4.1 through 2.4.4.

24.2 The Contractor shall install each pole base in accordance with the City Standard Specifications and shall be paid on the basis of the number of pole bases installed or replaced.

25. PRECAST POLE BASE RELOCATE WITH EXCAVATION (PAY ITEM 25a)

PRECAST POLE BASE RELOCATE WITHOUT EXCAVATION (PAY ITEM 25b)

25.1 The Contractor shall excavate and remove existing precast pole, pole unit and base, excavate and install all indicated pole bases, reinstall pole and unit, and test unit and circuit at the direction of the City within the time requirements set forth in paragraphs 2.4.1 through 2.4.4.

25.2 The Contractor shall be paid on the basis of the number of precast pole bases relocated. Payment shall include all labor, equipment, and materials necessary to relocate the base.

26. POLE BASE REMOVAL (PAY ITEM 25c)

26.1 The Contractor shall remove all indicated pole bases, remove the pole and unit and depending on the condition of the base, return it to City facilities for storage or properly dispose of it, at the direction of the City within the time requirements set forth in paragraphs 2.4.1 through 2.4.4.

26.2 The Contractor shall be paid on the basis of number of poles removed. Payment shall include all labor, equipment, and materials necessary to remove the base.

27. FIBERGLASS PULLBOX INSTALL/REMOVE, REPLACE WITH EXCAVATION (PAY ITEM 7a)

FIBERGLASS PULLBOX INSTALL/REMOVE, REPLACE WITHOUT EXCAVATION (PAY ITEM 7b)

FIBERGLASS PULLBOX/HANDHOLE 2" RISER INSTALL/REMOVE/REPLACE WITHOUT EXCAVATION (PAY ITEM 7c)

FIBERGLASS HANDHOLE/PULLBOX COVER INSTALL/REMOVE/REPLACE WITHOUT EXCAVATION (PAY ITEM 7d)

CONCRETE PULLBOX REPLACEMENT (PAY ITEMS 8a, 9a)

CONCRETE PULLBOX INSTALL WITH EXCAVATION (PAY ITEMS 8b, 9b)

CONCRETE PULLBOX INSTALL WITHOUT EXCAVATION (PAY ITEMS 8c, 9c)

CONCRETE PULLBOX REMOVAL (PAY ITEMS 8d, 9d)

BRICK HANDHOLE REBUILD, REPAIR (PAY ITEM 28)

METAL FRAME & COVER RESET (PAY ITEM 33A)

METAL FRAME & COVER REPLACE (PAY ITEM 33B)

27.1 The Contractor shall install, remove, replace or relocate all indicated pullboxes, risers, test circuit, and insure proper operation at the direction of the City within the time requirements set forth in paragraphs 2.4.1 through 2.4.4.

27.2 The Contractor shall be paid on the basis of the number of pullboxes removed, rebuilt, repaired, replaced, relocated or installed. Payment shall include all labor and materials necessary to replace, relocate or install the pullbox.

27.3 The Contractor shall reset or replace the metal frame and cover at the direction of the City within the time requirements set forth in paragraphs 2.4.1 through

2.4.4 The City may provide the replacement frame and cover or require the Contractor to supply the frame and cover under materials pay item.

28. FIBERGLASS HANDHOLE INSTALL/REMOVE/REPLACE WITH EXCAVATION (PAY ITEM 10a)

FIBERGLASS HANDHOLE INSTALL/REMOVE/REPLACE WITHOUT EXCAVATION (PAY ITEM 10b)

28.1 The Contractor shall replace, relocate or install all indicated handholes, risers, covers, test circuit, and insure proper operation at the direction of the City within the requirements set forth on paragraphs 2.4.1 through 2.4.4.

28.2 The Contractor shall be paid on the basis of the number of handholes replaced or relocated. Payment shall include all labor and materials necessary to replace, relocate or install the handhole.

29. MAST ARM (LAMP CRANE) INSTALLATION/REMOVAL (PAY ITEMS 20a, 20b)

ISOLATE OVERHEAD CIRCUIT (PAY ITEM 20c)

29.1 The Contractor shall install or remove all indicated mast arms at the direction of the City within the time requirements set forth in paragraphs 2.4.1 through 2.4.4.

29.2 The Contractor shall pick up and return mast arms to City facilities as directed by the City. The City shall supply all necessary mast arms.

29.3 The Contractor shall be paid on the number of mast arms installed and/or removed. Payment shall include all labor, equipment, material and hardware necessary to install or remove the mast arm.

29.4 The Contractor shall isolate the overhead circuit with a fuse and fuse holder installation for an overhead system. Separate payment for this labor will only be made under Pay Item 20c when approved by the City.

30. BOLLARD INSTALLATION, REPLACEMENT, OR REMOVAL

The Contractor shall provide all indicated labor, material, equipment, and services to install, replace, or remove steel bollards.

30.1 BOLLARD INSTALLATION (PAY ITEM 29a)

30.1.1 The Contractor shall furnish and install all indicated bollards at the direction of the City. All posts shall be installed plumb on equal spacing on a twelve (12") inch bed of gravel. Tops of all posts shall be uniform height and line 3'6" above grade. Interior surface of post cap in contact with the post will be coated with epoxy prior to being wedged in place. Before installing the post cap, the post shall be filled with Class A Concrete. Post and cap shall be primed and painted flat black.

30.1.2 The Contractor shall be paid on the basis of the number of bollards installed. Payment shall include all labor and materials necessary to install the bollard.

30.2 BOLLARD REPLACEMENT (PAY ITEM 29b)

30.2.1 The Contractor shall remove and haul away all indicated bollards and shall install new bollards in place of the removed bollards at the direction of the City. All posts shall be installed plumb on equal spacing on a twelve (12") inch bed of gravel. Tops of all posts shall be uniform height and line 3'6" above grade. Interior surface of post cap in contact with the post will be coated with epoxy prior to being wedged in place. Before installing the post cap, the post shall be filled with Class A Concrete. Post and cap shall be primed and painted flat black.

30.2.2 The Contractor shall be paid on the basis of the number of bollards replaced. Payment shall include all labor and materials necessary to replace the bollard.

30.3 BOLLARD REMOVAL (PAY ITEM 29c)

30.3.1 The Contractor shall remove and haul away all indicated bollards at the direction of the City. The Contractor shall restore the location of the removed bollard with like material.

30.3.2 The Contractor shall be paid on the basis of the number of bollards removed. Payment shall include all labor, equipment, and services necessary to remove and haul away the bollard (including standard restoration).

31. EXCAVATION AND RESTORATION

31.1 EXCAVATION

31.1.1 Excavation in treelawn area (PAY ITEM 30A)

The Contractor shall be paid on the basis of the number of cubic yards excavated in treelawn area. Payment shall include all backfilling, standard restoration, labor and equipment necessary to complete the excavation.

31.1.2 Excavation in non-treelawn area (PAY ITEM 30B)

The Contractor shall be paid on the basis of the number of cubic yards excavated in non-treelawn area. Payment shall include all backfilling, standard restoration, labor and equipment necessary to complete the excavation. Payment for non-standard restoration shall be made under City Pay Item No. 31.

31.1.3 Trenchless Excavation (PAY ITEM 30C)

The Contractor shall be paid on the basis of the number of linear feet of trenchless excavation.

31.2 RESTORATION

31.2.1 Standard Restoration

The Contingent Unit Price for excavation and all unit prices which include excavation shall include site restoration of backfilling, grading, and seeding.

31.2.2 Non-Standard Restoration (PAY ITEM 31)

A. Other restoration (requiring surfaces of concrete, asphalt, brick pavers, etc.) shall be performed by the Contractor at the direction of the City.

B. The Contractor shall be paid on the basis of the number of square feet restored. Payment shall include all labor, equipment, and materials necessary to complete the restoration.

32. LUMINAIRE INSTALL REMOVE (PAY ITEM 19a)

LUMINAIRE INSTALL/REMOVE WITH LIFT TRUCK (PAY ITEM 19b)

32.1 The Contractor shall install/remove all luminaires at the direction of the City within the time requirements set forth in paragraphs 2.4.1 through 2.4.4.

32.2 The Contractor shall be paid on the basis of the number of luminaires installed or removed. Payment shall include all labor, equipment and materials necessary to install or remove luminaires.

32.2.1 The City shall provide luminaires; however, the Contractor shall supply wire and associated hardware. Materials provided by the Contractor shall be paid for under specified material items as bid herein.

32.3 Work under this item may include any one or more of the following:

32.3.1 Luminaire installation/connection

32.3.2 Photocontrol installation/removal

32.3.3 Luminaire alignment

32.3.4 Luminaire removal/disconnection

33. DIRECT BURIAL POLE AND LUMINAIRE REPLACEMENT (PAY ITEM 22)

33.1 The Contractor shall replace all damaged City owned direct burial poles and luminaires at the direction of the City within the time requirements set forth in paragraphs 2.4.1 through 2.4.4. Work required may include:

33.1.1 Excavating a new hole to set pole in, and installing a direct burial pole assuring that it is vertical and plumb.

33.1.2 Wiring the pole and luminaire. Placing, connecting and orienting the luminaire.

33.1.3 Installing new lamp with the installation date marked using the coding provided on the lamp.

33.1.4 Installing and correctly orienting new photocontrol with the installation date marked using the coding provided on the photocontrol.

33.1.5 Assuring that the poles are installed and functioning properly.

33.1.6 Returning equipment to City facilities, (not limited to pole, fixture and related equipment).

33.1.7 Installing new light/pole ID number.

33.2 Payment shall include all labor and equipment necessary to replace the poles.

33.2.1 As part of this pay item, the Contractor shall supply incidental hardware not covered by the material pay items.

33.2.2 The Contractor will be paid on the basis of the number of direct burial poles and luminaires replaced.

34. DIRECT BURIAL WOOD POLE INSTALL/REPLACE 35' (PAY ITEM 23a)

DIRECT BURIAL WOOD POLE INSTALL/REPLACE 45' (PAY ITEM 23b)

DIRECT BURIAL WOOD POLE REMOVE (PAY ITEM 23c)

34.1 The Contractor shall install or remove all direct burial wood poles as directed by the City within the time requirements set forth in paragraphs 2.4.1 through 2.4.4.

34.2 The Contractor shall be paid on the basis of the number of direct burial wood poles installed/replaced or removed.

34.2.1 Payment shall include all labor and equipment necessary to install/replace or remove the wood poles.

34.2.2 The Contractor shall supply a wood pole under Pay Items 42a, 42b.

35. ANCHOR ROD REPAIR/POLE BASE MODIFICATION (PAY ITEM 32)

FIBERGLASS POLE BASE FOUNDATION EXTENSION ADJUSTMENT (PAY ITEM 24c)

METAL POLE BASE FOUNDATION EXTENSION ADJUSTMENT (PAY ITEM 24d)

35.1 An Anchor Rod Repair/Pole Base Modification shall be defined as any pole base where one or more anchor bolts is broken or bent to the extent that a pole cannot be placed and properly tightened; or any pole base where the bolt circle diameter is not large enough to permit a hole to be placed and properly tightened.

The Contractor shall repair/modify all indicated pole bases at the direction of the City within the time requirement set forth in Paragraphs 2.4.1 through 2.4.4.

Work required may include:

35.1.1 Removing light pole and luminaire from pole base.

35.1.2 Cut off damaged/indicated bolts flush to top of pole base.

35.1.3 Drill appropriate diameter holes to accommodate 3/4" and 5/8" anchor rods to form diameter bolt circles as directed by the City.

35.1.4 Install City Molly Parabond Capsule Anchor and City-supplied chamfered bolt. Install according to manufacturer's most recent instructions. (Attachment B)

35.1.5 Install pole and luminaire.

35.2 Fiberglass Pole Base Foundation Extension Adjustment

35.2.1 The existing cable shall be disconnected, and the existing light pole and luminaire removed in such a manner that they are not damaged.

35.2.2 The existing base shall be scarified or removed to accommodate a minimum 5 inch thick Class K concrete cap. Before pouring the new cap, the top of the existing base shall be coated with an approved slurry bond coat.

35.2.3 The existing conduit and anchor rods shall be extended as required with extensions and couplings. The extensions shall be of a sufficient length such that a minimum of 2 inches of the anchor rods, and 9 inches of the conduit shall protrude above the top of the new cap.

35.2.4 The new cap shall be formed and poured onto the top of the existing base. The light pole and luminaire shall be installed onto the base, the cable reconnected, and all wiring necessary shall be done to make the unit operable.

35.2.5 The excavation shall be backfilled and the disturbed surface area restored.

35.3 Metal Pole Base Foundation Extension Adjustment

35.3.1 The existing cable shall be disconnected, and the existing light pole and luminaire removed in such a manner that they are not damaged.

35.3.2 The existing base shall be scarified or removed to accommodate a minimum 6 inch thick Class K concrete cap. Before pouring the new cap, the top of the existing base shall be coated with an approved slurry bond coat.

35.3.3 The existing conduit and anchor rods shall be extended as required with extensions and couplings. The extensions shall be of a sufficient length such that a minimum of 3 inches of the anchor rods, and 9 inches of the conduit shall protrude above the top of the new cap.

35.3.4 The new cap shall be formed and poured onto the top of the existing base. The light pole and luminaire shall be installed onto the base, the cable reconnected, and all wiring necessary shall be done to make the unit operable.

35.3.5 The excavation shall be backfilled and the disturbed surface area restored.

35.4 The Contractor shall be paid on the basis of the number of pole bases repaired/modified. This will include labor and equipment to do repair/modify the pole bases. (Payment for Molly Parabond Capsule Anchors shall be paid separately under material Pay Item No. 37, Molly Capsule, as bid herein.)

36. ADDITIONAL CONTRACT DOCUMENTS

36.1 The City of Rochester Department of Environmental Services "Standard Construction Contract Documents" dated November 1, 1991, shall apply except where superseded by the specific wording in this bidding document.

36.2 The "Standard Construction Contract Documents" are issued separately in a bound volume, to be used with the project. Bidders may purchase a bound volume of these "Standards" from the City of Rochester Purchasing Agent for $25.00.

36.3 Specific items not covered under this contract shall be paid for as described in Article 10 of the Standard Contractor documents.

37. NON-SPECIFIED ITEMS

37.1 The City reserves the right to negotiate prices with and order from the contractor non-specified items or services which are comparable to and/or compliment the items or services specified herein.

37.2 Such orders will be placed if the City concludes that it is in the City's best interest to purchase such items so that they are consistent with the items specified.

37.3 Addition of non-specified items must be acknowledged in writing by the Purchasing Agent prior to ordering.

37.4 Items supplied or services rendered without the prior consent of the Purchasing Agent will not be paid for by the City.

38. BONDS

38.1 BID BOND

A bid bond in an amount equal to five (5%) percent of the bid price shall be furnished with each bid. At its option, the City shall have the right to accept cash, a certified check, or a letter of credit in satisfaction of this requirement.

38.2 PERFORMANCE AND OTHER BONDS

38.2.1 The Contractor must furnish two executed surety company bonds, each in an amount equal to one hundred (100%) of the bid price.

A. A Performance Bond shall be furnished as security for the faithful performance by the Contractor of all terms and conditions of the contract documents.

B. A Labor and Material Payment Bond shall be furnished as security for the claims of laborers and material suppliers.

C. Both bonds shall be made out to the City of Rochester, prepared on an approved form and submitted by the Contractor to the Purchasing Agent within ten (10) days of notification that his bid was accepted. The surety thereon must be such surety company or companies as are authorized and licensed to transact business in the State of New York. The surety furnishing the Performance Bond and the Labor and Material Payment Bond must waive notice of any change in the contract price or contract time. Attorneys-in-fact who sign bonds must file with each bond a certified copy of their power of attorney to sign said bonds.

38.2.2 Alternate Security

A. At its option, the City shall have the right to accept cash, a certified check, or a letter of credit in satisfaction of the foregoing requirements.

B. In the event the Contractor submits cash or a cash instrument as alternate security, the City will accept 100% of the contract total as satisfying both Performance and Payment security requirements.

C. Any security accepted in lieu of a payment bond shall be retained until the City is no longer liable for mechanic's liens against the work of the contract.

40. INSURANCE

40.1 The Contractor shall procure and maintain at his/her own expense until final acceptance of the work covered by the contract documents, insurance for liability for damages imposed by law of the kinds and in the amounts hereinafter provided from insurance companies authorized to do such business in the State of New York covering all operations under the contract documents whether performed by him or his subcontractors.

40.2 Within ten days of request, the Contractor shall furnish to the City Purchasing Agent a certificate or certificates of insurance in form satisfactory to the City Purchasing Agent showing that he/she has complied with this Section, which certificate or certificates shall provide that the policies shall not be materially changed or cancelled until ten days' written notice has been given to the City Purchasing Agent. In each policy of insurance except insurance for Workers' Compensation and Disability Insurance, the City shall be named as an additional insured for liability arising under this agreement. Except for Workers' Compensation and Disability Insurance, no insurance required herein shall contain any exclusion of municipal operations performed in connection with the project. The kinds and amounts of insurance are as follows:

40.2.1 WORKERS' COMPENSATION AND DISABILITY INSURANCE

The agreement shall be void and of no effect unless the person or corporation making or executing same shall secure Compensation and Disability coverage, covering all operations under the contract--whether performed by him or his subcontractors--for the benefit of, and keep insured during the life of said agreement, employees in compliance with the provisions of the Workers' Compensation Law.

A. Workers' Compensation Insurance

A policy covering the operations of the Contractor in accordance with the provisions of Chapter 41 of the Laws of 1914, as amended, known as the Workers' Compensation Law.

B. Disability Insurance

A policy covering the operations of the Contractor in accordance with the provisions of Article 9 of the Workers' Compensation Law, known as the Disability Benefits Law (Chapter 600 of the Laws of 1949) and amendments thereto.

40.2.2 PROPERTY AND CASUALTY INSURANCE

A. CONTRACTOR'S COMPREHENSIVE GENERAL LIABILITY INSURANCE issued to the Contractor and covering the liability for damages imposed by law upon the Contractor with respect to all work performed by him under the within agreement. TheContractor's Comprehensive General Liability Insurance shall include: Independent contractor's insurance, premises operation insurance, completed operations insurance and broad form property damage insurance. The x., c., u. exclusion shall be eliminated from the Contractor's Comprehensive General Liability Insurance. The comprehensive general liability policy shall furnish limits of not less than:

BODILY INJURY AND PROPERTY DAMAGE LIABILITY
Combined Single Limit
$1,000,000

for all damages arising during the policy period.

B. MOTOR VEHICLE INSURANCE issued to the Contractor and covering public liability and property damage on the contractor's vehicles in the amount of:

BODILY INJURY AND PROPERTY DAMAGE LIABILITY
Combined Single Limit
$1,000,000

41. WARRANTY AND GUARANTEE

41.1 The Contractor shall warrant that the work performed under Pay Items 14a through 14d; 15a through 15d ; 16a through 16d ; 17a through 17c ; 18a through 18c ; 19a through 19b ; 20a through 20c ; 21a through 21c ; 23a through 23c ;24c ; 25a through 25b ; 26, 29a, 29b and 29c conforms to the requirements of the contract documents and is free of any defect of equipment, material or design furnished, or workmanship performed by the Contractor or any of his subcontractors or suppliers at any tier.

41.2 Such warranty shall continue for a period of two (2) years from the date of completion of the work. Under this warranty the Contractor shall remedy at its own expense any such failure to conform or any such defect. If the Contractor does not promptly comply with the terms of the warranty, or in an emergency situation where delay would cause serious risk of loss or damage, the City may have the defective work corrected or removed and replaced, and all direct and indirect costs of such removal and replacement shall be paid by the contractor.

41.3 Prior to final payment in any contract year, the Contractor shall furnish to the City a Guarantee Bond in the amount of Five Thousand ($5,000) Dollars per contract year. Such bond shall conform to the requirements set forth for Performance and Materials Payment Bonds in Section 39.

42. NON-DISCRIMINATION

The bidder agrees, as required by the Labor Law of the State of New York and ordinance of the City of Rochester:

42.1 To hire employees without regard to age, race, creed, color, national origin, sex, sexual orientation, disability or marital status;

42.2 That he, his subcontractors, and any person on his behalf shall not, in any manner, discriminate against or intimidate any employee hired for the performance of work under this contract on account of age, race, creed, color, national origin, sex, sexual orientation, disability or marital status;

42.3 That this contract may be cancelled or terminated by the City and all monies due or to become due hereunder may be forfeited for a second day or any subsequent violation of the terms or conditions of this section of the contract.

43. LABOR STANDARDS REQUIREMENTS

43.1 COMPLIANCE WITH LABOR LAWS

43.1.1 The contractor's attention is directed to the requirements of Sections 220 and 220-a through 220-e of the Labor Law of the State of New York, compliance with the provisions of which shall be deemed a condition to the satisfactory performance of this contract.

43.1.2 The Contractor shall cause to be posted and maintained at all times in a conspicuous place at the Site of the Work a clearly legible copy of the Schedule of Wage Rates as prescribed by the State Commissioner of Labor. The Contractor shall further certify on any statement to the City for a partial or final payment that the wage rates paid to employees on this project have been in conformity with the wage rates so set forth as determined by the State Commissioner of Labor pursuant to and in conformity with Section 220 of the New York State Labor Law.

43.1.3 The Contractor shall keep a copy of his payrolls for this project available at all times for inspection by representatives of the City or other public agency having jurisdiction over the project, and shall produce them for such inspection at the request of said duly authorized representatives. The Contractor and subcontractors shall submit weekly-certified payroll records to the Project Manager, for transmission to the City's Director of Finance or his designee. The Contractor shall be responsible for the submission of copies of certified payrolls of all subcontractors. Payments shall be withheld from the Contractor for failure to comply with this requirement.

43.1.4 In all operations related to the Work, all other State or Federal Laws, Local Ordinances and Laws, controlling or limiting in any way the actions of those engaged in the Work, shall be strictly complied with by the Contractor and all employees working under his direction. The foregoing shall apply to subcontractors of the contractor.

43.2 ANTI-KICKBACK RULES

Employees of the Contractor and his subcontractors performing work under this contract shall be paid unconditionally and not less often than once a week without deduction or rebate on any account except only such payroll deductions that are mandatory by law or permitted by the applicable regulations issued by the State Commissioner of Labor pursuant to the New York Labor Law. The Contractor shall comply with applicable "Anti-Kickback" regulations and shall insert appropriate provisions in all subcontracts covering work under this contract to insure compliance by subcontractors with such regulations, and shall be responsible for the submissions of affidavits required of subcontractors thereunder except as the Commissioner of Labor may specifically provide for variations of or exemptions from the requirements thereof.

43.3 WITHHOLDING OF PAYMENTS FROM CONTRACTOR

When a complaint is filed with the City of Rochester alleging the failure of a Contractor or subcontractor to pay or provide the prevailing wages or supplements, or when the City of Rochester has reason to believe that unpaid wages or supplements may be due, payments on the public work contract may be withheld from the prime Contractor in sufficient amount to satisfy the alleged unpaid wages and supplements, including interest and civil penalty which may be imposed. The amounts withheld may be disbursed by the City of Rochester for and on account of the Contractor or subcontractor to the respective employees to whom they are due.

44. PREVAILING WAGE RATES

44.1 Incorporated in these Contract Documents is the Prevailing Wage Rates Schedule in effect at the time of publication of these Contract Documents. Any Prevailing Wage Rates Redetermination which may arise prior to the bid opening will be distributed by addendum.

44.2 In the event that the prevailing rate of wages or supplements change after the bids have been opened, or after the contract is let, an updated schedule will be issued by the State Department of Labor. Said updated schedule will be transmitted to the Contractor by the City. Each workman, laborer or mechanic shall be paid or provided not less than the new updated rates.

44.3 The City will not be responsible for any of the contractor's increased labor costs which result from defects in the Wage Rate Schedule provided, or from amendments to the Prevailing Wage Rate Schedule, whether that increase occurs before advertisement, before Bid opening, before award of the contract, after the contract has been let, or during the life of the contract. No change in the contract price shall be allowed to the Contractor for any such increases, except as provided for elsewhere in these documents.

44.4 Information about current wage rates may be obtained on an advisory basis by contacting the City's Contract Administrator, Department of Finance, City Hall, Rochester, New York, (585) 428-7398.

45. NON-COLLUSIVE BIDDING CERTIFICATION

By submission of this bid, each bidder and each person signing on behalf of any bidder certifies, and in the case of a joint bid each party certifies as to its own organization, under penalty of perjury, that to the best of its knowledge and belief:

45.1 The prices in this bid have been arrived at independently without collusion, consultation, communication, or agreement, for the purpose of restricting competition, as to any matter relating to such prices with any other bidder or with any competitor.

45.2 Unless otherwise required by law, the prices which have been quoted in this bid have not knowingly been disclosed by the bidder and will not knowingly be disclosed prior to the bid opening, directly or indirectly, to any other bidder or to any competitor.

45.3 No attempt has been or will be made by the bidder to induce any other person, partnership or corporation to submit or not to submit a bid for the purpose of restricting competition.

46. REQUEST FOR PRICE CHANGE

46.1 Prices bid shall remain firm for the initial contract term.

46.2 Request for price increases to take effect during a contract extension must be submitted with the offer to extend or earlier.

46.3 Requests for increases must be documented as representing increased costs only. No request shall be granted to increase net profit.

46.4 The decision to grant a price increase during the extension period will rest solely with the Purchasing Agent.

STREET LIGHTING MAINTENANCE - ELECTRICAL

PROPOSAL

The undersigned bidder hereby agrees to furnish the goods or services specified and to otherwise fully meet all terms, conditions, and specifications contained in this Invitation to Bid without exception, unless exceptions are clearly noted in this proposal. Signature must be that of the bidder or of an employee or agent authorized to sign on behalf of the bidder.

GROUP A: ROUTINE MAINTENANCE

***Pay Items requiring a Master Licensed Electrician**

ITEM #	DESCRIPTION	UNIT PRICE		EST. QTY.		TOTAL
*1a.	Luminaire Malfunction Repair	_____	ea.	x 4300	=	_____
*1b.	Utility Luminaire Install/Remove	_____	ea.	x 200	=	_____
*1c.	Decorative Luminaire Install/Remove	_____	ea.	x 30	=	_____
*1d.	Relamp/Luminaire Upgrade	_____	ea.	x 100	=	_____
*2.	Circuit Outage Repair	_____	ea.	x 150	=	_____
*3a.	Emergency Cleanup - 10'-14' Fiberglass Pole Knockdown	_____	ea.	x 30	=	_____
*3b.	Emergency Cleanup - 20'-35' Metal Pole Knockdown	_____	ea.	x 10	=	_____
*3c.	Emergency Cleanup - under 20' metal/over 14' fiberglass	_____	ea.	x 10	=	_____

_____ _____

Authorized Signature Typed Name and Title of Authorized Signer

_____

Typed Name of Company

(Continued through Page 56)

PROPOSAL

GROUP A. ROUTINE MAINTENANCE (continued)

***Pay Items requiring a Master Licensed Electrician**

ITEM #	DESCRIPTION	UNIT PRICE		EST. QTY.		TOTAL
*3d	Emergency Cleanup - Wood Pole Knockdown	_____	ea.	x	1 =	_____
*4a.	10-14' Fiberglass Pole Install/Remove	_____	ea.	x	100 =	_____
*4b.	20'-35' Metal Pole Install/Remove	_____	ea.	x	10 =	_____
*4c.	Under 20' Metal Pole/over 14' Fiberglass Pole Install/Remove	_____	ea.	x	10 =	_____
*4d.	Decorative Metal Pole Install/Remove	_____	ea.	x	10 =	_____
*5a.	Conduit/Cable Repair w/Excavation	_____	ea.	x	25 =	_____
*5b.	Conduit/Cable Repair w/o Excavation	_____	ea.	x	20 =	_____
*5c.	Conduit/Cable 1" Lead Repair w/Excavation	_____	ea.	x	5 =	_____
*5d.	Conduit/Cable 1" Lead Repair w/o Excavation	_____	ea.	x	5 =	_____

_____ Authorized Signature

_____ Typed Name and Title of Authorized Signer

_____ Typed Name of Company

(Continued through Page 56)

PROPOSAL

GROUP A. ROUTINE MAINTENANCE (continued)

***Pay Items requiring a Master Licensed Electrician**

ITEM #DESCRIPTION	UNIT PRICE		EST. QTY.		TOTAL
6a. Split Duct Repair w/Excavation	_____	ea.	x 10	=	_____
6b. Split Duct Repair w/o Excavation	_____	ea.	x 20	=	_____
7a. Fiberglass Pullbox, Install/ Remove/Replace w/Excavation	_____	ea.	x 30	=	_____
7b. Fiberglass Pullbox Install/ Remove/Replace w/o Excavation	_____	ea.	x 10	=	_____
7c. Fiberglass Pullbox/Handhole, 2" Riser Install/Remove/Replace	_____	ea.	x 10	=	_____
7d. Fiberglass Handhole/Pullbox Cover Install/Remove/Replace	_____	ea.	x 10	=	_____
8a. 24" Concrete Pullbox Replacement	_____	ea.	x 1	=	_____
8b. 24" Concrete Pullbox Install w/Excavation	_____	ea.	x 1	=	_____
8c. 24" Concrete Pullbox Install w/o Excavation	_____	ea.	x 1	=	_____

_____ _____

Authorized Signature Typed Name and Title of Authorized Signer

_____

Typed Name of Company

(Continued through Page 56)

PROPOSAL

GROUP A. ROUTINE MAINTENANCE (continued)

***Pay Items requiring a Master Licensed Electrician**

ITEM #	DESCRIPTION	UNIT PRICE	EST. QTY.	TOTAL
8d.	24" Concrete Pullbox Removal	_____ea.	x 1 =	_____
9a.	30" Concrete Pullbox Replacement	_____ea.	x 1 =	_____
9b.	30" Concrete Pullbox Install w/Excavation	_____ea.	x 1 =	_____
9c.	30" Concrete Pullbox Install w/o Excavation	_____ea.	x 1 =	_____
9d.	30" Concrete Pullbox Removal	_____ea.	x 1 =	_____
10a.	Fiberglass Handhole Install/Remove/Replace w/Excavation	_____ea.	x 15 =	_____
10b.	Fiberglass Handhole Install/Remove/Replace w/o Excavation	_____ea.	x 5 =	_____

_____ Authorized Signature

_____ Typed Name and Title of Authorized Signer

_____ Typed Name of Company

(Continued through Page 56)

STREET LIGHTING MAINTENANCE - ELECTRICAL

PROPOSAL

GROUP A. ROUTINE MAINTENANCE (continued)

***Pay Items requiring a Master Licensed Electrician**

ITEM #	DESCRIPTION	UNIT PRICE		EST. QTY.		TOTAL
11a.	Fiberglass Pole Adjustment	_____	ea.	x	50 =	_____
11b.	Metal Pole Adjustment	_____	ea.	x	5 =	_____
11c.	2-piece Shroud Replacement	_____	ea.	x	10 =	_____
11d.	Pole Access Door Replacement	_____	ea.	x	15 =	_____
*12A.	Experimentation	_____	hr.	x	10 =	_____
*12B.	Consultation	_____	hr.	x	50 =	_____
*13.	Troubleshooting	_____	hr.	x	500 =	_____

SUBTOTAL - GROUP A: $_____

_____ Authorized Signature

_____ Typed Name and Title of Authorized Signer

_____ Typed Name of Company

(Continued through Page 56)

STREET LIGHTING MAINTENANCE - ELECTRICAL

PROPOSAL

GROUP B: NON-ROUTINE REPAIR OR PROJECT RELATED WORK

***Pay Items requiring a Master Licensed Electrician**

ITEM #	DESCRIPTION	UNIT PRICE			EST. QTY.		TOTAL
14a.	2" PVC Conduit Replace/Install w/Excavation	_____	ft.	x	1000	=	_____
14b.	Add for 2" Steel Conduit	_____	ft.	x	100	=	_____
14c.	Add for 3" PVC Conduit	_____	ft.	x	25	=	_____
14d.	Add for 3" Steel Conduit	_____	ft.	x	25	=	_____
14e.	Riser Assembly Schedule 80	_____	ea.	x	5	=	_____
14f.	Riser Assembly Galvanized	_____	ea.	x	20	=	_____
15a.	2" PVC Conduit Replace/Install w/o Excavation	_____	ft.	x	300	=	_____
15b.	Add for 2" Steel Conduit	_____	ft.	x	300	=	_____
15c.	Add for 3" PVC Conduit	_____	ft.	x	25	=	_____
15d.	Add for 3" Steel Conduit	_____	ft.	x	25	=	_____

_____ _____

Authorized Signature Typed Name and Title of Authorized Signer

_____

Typed Name of Company

(Continued through Page 56)

STREET LIGHTING MAINTENANCE - ELECTRICAL

PROPOSAL

GROUP B: NON-ROUTINE REPAIR OR PROJECT RELATED WORK

***Pay Items requiring a Master Licensed Electrician**

ITEM #	DESCRIPTION	UNIT PRICE			EST. QTY.		TOTAL
16a.	1" Innerduct Installation	_____	Lin. ft.	x	200	=	_____
16b.	Add for 1-1/2" Innerduct	_____	Lin. ft.	x	300	=	_____
16c.	Add for 2" Innerduct	_____	Lin. ft.	x	200	=	_____
*17a.	#6 Cable Furnish/Install	_____	ft.	x	**5,000**	=	_____
*17b.	#10 Cable Furnish/Install	_____	ft.	x	5,000	=	_____
*17c.	#4 Cable triplex Install/Remove	_____	ft.	x	5,000	=	_____
*17d	#2 Cable Furnish/Install	_____	ft.	x	1,000	=	_____
*18a.	#6 Cable Remove	_____	ft.	x	1,000	=	_____
*18b.	#10 Cable Remove	_____	ft.	x	1,000	=	_____
*18c.	#2 Cable Remove	_____	ft.	x	50	=	_____
*19a.	Utility Luminaire Install/Remove	_____	ea.	x	200	=	_____

_____ _____

Authorized Signature Typed Name and Title of Authorized Signer

_____

Typed Name of Company

(Continued through Page 56)

PROPOSAL

GROUP B: NON-ROUTINE REPAIR OR PROJECT RELATED WORK

***Pay Items requiring a Master Licensed Electrician**

ITEM #	DESCRIPTION	UNIT PRICE			EST. QTY.		TOTAL
*19b.	Decorative Luminaire Install/Remove	_____	ea.	x	200	=	_____
*19c.	Group Fixture Replacement	_____	ea.	x	100	=	_____
20a.	2.5' - 10' Mast Arm Install/Remove	_____	ea.	x	200	=	_____
20b.	12' - 20' Mast Arm Install/Remove	_____	ea.	x	50	=	_____
*20c.	Isolate Overhead Circuit	_____	ea.	x	50	=	_____
*21a.	Anchor Base Fiberglass Pole Install/Remove	_____	ea.	x	50	=	_____
*21b.	Anchor Base Fiberglass Pole Install/Remove (shaft & arm)	_____	ea.	x	30	=	_____
*21c.	Anchor Base Davit Style Metal Pole Install/Remove	_____	ea.	x	100	=	_____
*21d.	Anchor Base Metal Pole Install/Remove (shaft & arm)	_____	ea.	x	100	=	_____

_____ Authorized Signature

_____ Typed Name and Title of Authorized Signer

_____ Typed Name of Company

(Continued through Page 56)

STREET LIGHTING MAINTENANCE - ELECTRICAL

PROPOSAL

GROUP B: NON-ROUTINE REPAIR OR PROJECT RELATED WORK

***Pay Items requiring a Master Licensed Electrician**

ITEM #	DESCRIPTION	UNIT PRICE			EST. QTY.		TOTAL
*21e.	Post Top Metal Anchor Base Pole Install/Remove	_____	ea.	x	10	=	_____
*22.	Direct Burial Post Top Pole Replacement	_____	ea.	x	10	=	_____
23a.	Direct Burial 35' Wood Pole Install/Replace	_____	ea.	x	10	=	_____
23b.	Direct Burial 45' Wood Pole Install/Replace	_____	ea.	x	10	=	_____
23c.	Direct Burial Wood Pole Remove	_____	ea.	x	10	=	_____
24a.	Precast Pole Base Install w/Excavation	_____	ea.	x	10	=	_____
24b.	Precast Pole Base Install w/o Excavation	_____	ea.	x	10	=	_____
*24c.	Pole Base Extension Adjustment, Fiberglass	_____	ea.	x	5	=	_____
*24d.	Pole Base Extension Adjustment, Metal	_____	ea.	x	5	=	_____

_____ Authorized Signature

_____ Typed Name and Title of Authorized Signer

_____ Typed Name of Company

(Continued through Page 56)

STREET LIGHTING MAINTENANCE - ELECTRICAL

PROPOSAL

GROUP B: NON-ROUTINE REPAIR OR PROJECT RELATED WORK

***Pay Items requiring a Master Licensed Electrician**

ITEM #	DESCRIPTION	UNIT PRICE			EST. QTY.		TOTAL
*25a.	Precast Pole Base Relocate w/Excavation	_____	ea.	x	5	=	_____
*25b.	Precast Pole Base Relocate w/o Excavation	_____	ea.	x	5	=	_____
*25c.	Pole Base Remove	_____	ea.	x	20	=	_____
26.	Fiberglass Handhole/Pullbox Cover Replacement	_____	ea.	x	10	=	_____
*27a.	Pole Base Reset w/Excavation	_____	ea.	x	10	=	_____
*27b.	Pole Base Reset w/o Excavation	_____	ea.	x	10	=	_____
*28.	24" Brick Handhole Rebuild/Repair	_____	ea.	x	10	=	_____
29a.	Bollard Install	_____	ea.	x	5	=	_____
29b.	Bollard Replacement	_____	ea.	x	5	=	_____
29c.	Bollard Removal	_____	ea.	x	5	=	_____

_____ Authorized Signature

_____ Typed Name and Title of Authorized Signer

_____ Typed Name of Company

(Continued through Page 56)

PROPOSAL

GROUP B: NON-ROUTINE REPAIR OR PROJECT RELATED WORK

***Pay Items requiring a Master Licensed Electrician**

ITEM #	DESCRIPTION	UNIT PRICE		EST. QTY.		TOTAL
30a.	Excavation/Restoration in Treelawn Area	_____	cu. yd .x	100	=	_____
30b.	Excavation/Restoration in Non-Treelawn Area	_____	cu. yd. x	100	=	_____
30c.	Trenchless Excavation	_____	Lin. ft. x	500	=	_____
31.	Non-standard Restoration	_____	sq. ft. x	500	=	_____
*32.	Anchor Rod Repair/Pole Base Modify	_____	ea. x	50	=	_____
33a.	Metal Frame & Cover Reset	_____	ea. x	10	=	_____
33b.	Metal Frame & Cover Replace	_____	ea. x	10	=	_____

SUBTOTAL - GROUP B: $_____

_____ Authorized Signature

_____ Typed Name and Title of Authorized Signer

_____ Typed Name of Company

(Continued through Page 56)

STREET LIGHTING MAINTENANCE - ELECTRICAL

PROPOSAL

GROUP C: CONTRACTOR SUPPLIED MATERIALS

ITEM #	DESCRIPTION	UNIT PRICE			EST. QTY.		TOTAL
34.	Bolt Connector	_____	ea.	x	100	=	_____
35a.	Breakaway Fuse Holder - Type KTK	_____	ea.	x	100	=	_____
35b.	Non-Breakaway Fuse Holder Type KTK	_____	ea.	x	10	=	_____
35c.	Fuse Holder - Type SC	_____	ea.	x	10	=	_____
36a.	Fuse - Type KTK	_____	ea.	x	200	=	_____
36b.	Fuse - Type SC	_____	ea.	x	10	=	_____
37.	Capsule Anchor	_____	ea.	x	100	=	_____
38a.	2" PVC Conduit						
	(1) 40 Schedule	_____	Lin. ft.	x	1000	=	_____
	(2) 80 Schedule	_____	Lin. ft.	x	500	=	_____
38b.	3" PVC Conduit	_____	Lin. ft.	x	50	=	_____
38c.	2" Galvanized Steel Conduit	_____	Lin. ft.	x	100	=	_____
38d.	3" Galvanized Steel Conduit	_____	Lin. ft.	x	25	=	_____

_____ Authorized Signature

_____ Typed Name and Title of Authorized Signer

_____ Typed Name of Company

(Continued through Page 56)

STREET LIGHTING MAINTENANCE - ELECTRICAL

PROPOSAL

GROUP C: CONTRACTOR SUPPLIED MATERIALS

ITEM #	DESCRIPTION	UNIT PRICE			EST. QTY.		TOTAL
39a.	#6 Cable	_____	ft.	x	1000	=	_____
39b.	#10 Cable	_____	ft.	x	1000	=	_____
39c.	#2 Cable	_____	ft.	x	50	=	_____
40.	#4 Triplex Cable (incl.hardware)	_____	ft.	x	150	=	_____
41a.	Wood Pole 35'Class 4	_____	ea.	x	1	=	_____
41b.	Wood Pole 45' Class 3	_____	ea.	x	1	=	_____
42.	Light/Pole ID Numbers	_____	ea.	x	1,000	=	_____
43a.	Metal Frame & Cover, 2' x 2'	_____	ea.	x	10	=	_____
43b.	Metal Frame & Cover, 3' x 3'	_____	ea.	x	1	=	_____
44.	2' x2' Concrete Pull Box						
	a. (1) 30" Deep	_____	ea.	x	50	=	_____
	b. (2) 36" Deep	_____	ea.	x	25	=	_____

SUBTOTAL - GROUP C: $_____

_____ Authorized Signature

_____ Typed Name and Title of Authorized Signer

_____ Typed Name of Company

(Continued through Page 56)

STREET LIGHTING MAINTENANCE - ELECTRICAL

PROPOSAL

BID SUMMARY

SUBTOTAL GROUP A	**$**_____
SUBTOTAL GROUP B	**$**_____
SUBTOTAL GROUP C	**$**_____
TOTAL BID PRICE	**$**_____

_____ _____

Authorized Signature Typed Name and Title of Authorized Signer

_____

Typed Name of Company

(Continued through Page 56)

STREET LIGHTING MAINTENANCE - ELECTRICAL

PROPOSAL

PRINT OR TYPE THE FOLLOWING INFORMATION:

_____
Name of Firm or Corporation

_____
Street Address

_____
City State Zip Code

_____ _____
Telephone / Fax No. Federal Employer Identification No.

_____
E-mail Address of Recipient of Contract Awards and Extensions

_____
Date

****

ACCEPTED ON BEHALF OF THE CITY OF ROCHESTER FOR:

_____

Contract No. _____ Contract Term:_____

_____
Purchasing Agent

Date: _____

ATTACHMENT "A"

MOLLY PARABOND CAPSULE ANCHOR

INSTALLATION INSTRUCTIONS

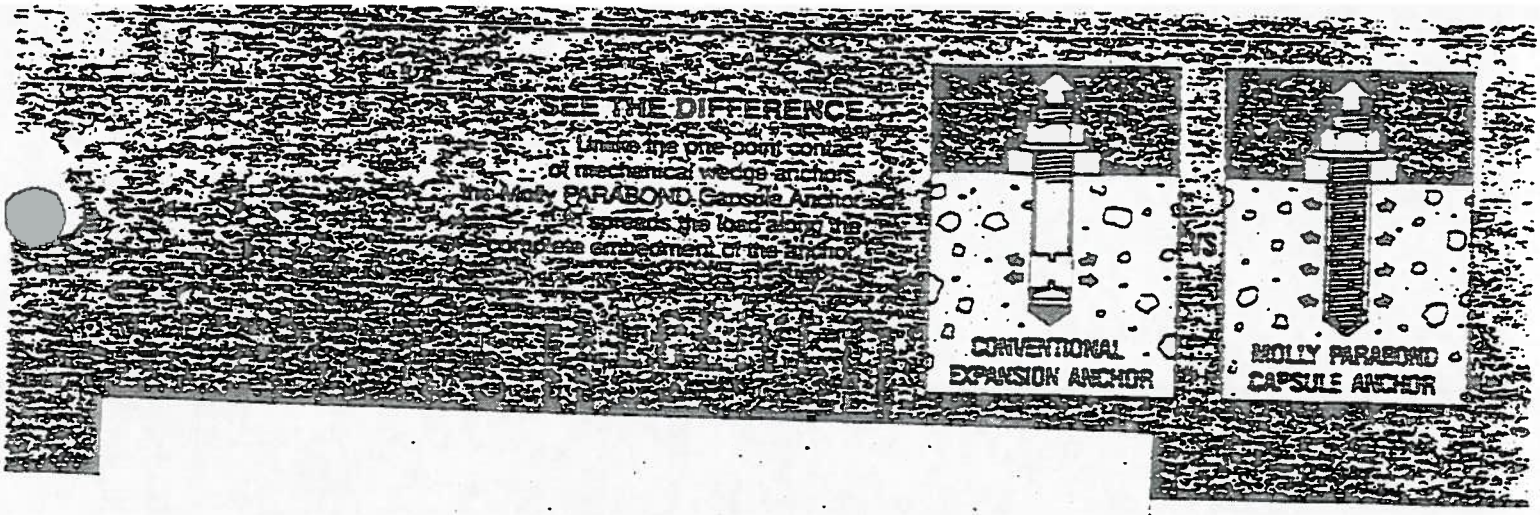

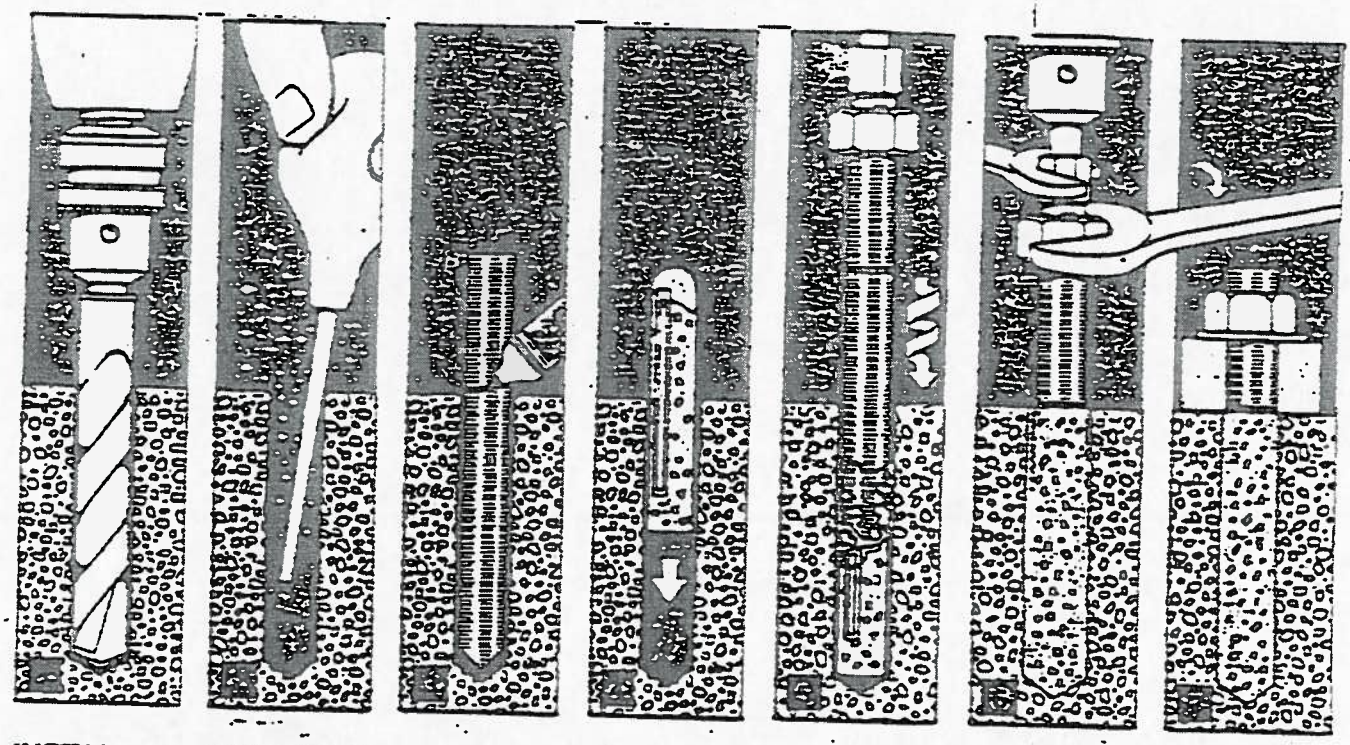

INSTALLATION INSTRUCTIONS

1. Use a rotary percussion hammer drill.* Drill hole to correct size and depth.
2. **CLEAN DUST FROM HOLE.** Compressed air preferred.* (Dust in hole will significantly reduce stud pull-out strength.)
3. Insert double-45° chamfered stud into hole. (Single chamfer studding may affect performance.) Mark stud to indicate hole depth. Remove stud and check for dust accumulation. If dust is found on stud, go back to step 2.
4. Insert capsule into hole, with rounded end facing upward.
5. Screw stud halfway into nut, screw patented drive unit into nut/stud assembly, and secure drive unit into chuck of rotary percussion hammer drill. Break capsule with double-45° chamfered end of stud.** Using rotary hammer drill, drive stud to bottom of hole, as indicated by mark on stud. (Concrete must be thick enough not to break through.) Turn off immediately. If necessary, release chuck and remove rotary hammer.
6. Avoid disturbing stud, but hold drive unit with wrench. With another wrench, turn nut clockwise to release friction lock. Remove drive unit.
7. Allow resin to cure for specified time (see chart) before loading stud.

*SAFETY GOGGLES REQUIRED

**Fumes and contact with skin may be harmful

RECOMMENDED CURING TIME

CONCRETE TEMPERATURE	MINIMUM CURE TIME
68°F and over	10 min.
50°F to 68°F	20 min.
32°F to 50°F	1 hr.
23°F to 32°F	5 hr.

NOTE: Not recommended for use in concrete cured less than 7 days.

STORAGE RECOMMENDATIONS

For maximum shelf life, PARABOND® Capsules should be stored in original packaging in a controlled environment: 50°F to 100°F, well-ventilated, and dry. Shelf life of up to four (4) years is possible, but higher ambient temperatures and ultra-violet rays may affect polyester resin and significantly reduce shelf life. As long as resin flows honey-like (not gelled), capsule should perform.

ATTACHMENT "B"

PREVAILING WAGE RATE SCHEDULE

Andrew M. Cuomo, Governor

Colleen C. Gardner, Commissioner

City of Rochester

David Crocker, Contract Administrator
Dept. of Finance
City Hall, Room 106-A
30 Church St.
Rochester NY 14614-1282

Schedule Year 2011 through 2012
Date Requested 04/26/2012
PRC# 2012003776

Location Various Locations
Project ID#
Project Type Street Lighting Maintenance - Electrical

PREVAILING WAGE SCHEDULE FOR ARTICLE 8 PUBLIC WORK PROJECT

Attached is the current schedule(s) of the prevailing wage rates and prevailing hourly supplements for the project referenced above. A unique Prevailing Wage Case Number (PRC#) has been assigned to the schedule(s) for your project.

The schedule is effective from July 2011 through June 2012. All updates, corrections, posted on the 1st business day of each month, and future copies of the annual determination are available on the Department's website www.labor.state.ny.us. Updated PDF copies of your schedule can be accessed by entering your assigned PRC# at the proper location on the website.

It is the responsibility of the contracting agency or its agent to annex and make part, the attached schedule, to the specifications for this project, when it is advertised for bids and /or to forward said schedules to the successful bidder(s), immediately upon receipt, in order to insure the proper payment of wages.

Please refer to the "General Provisions of Laws Covering Workers on Public Work Contracts" provided with this schedule, for the specific details relating to other responsibilities of the Department of Jurisdiction.

Upon completion or cancellation of this project, enter the required information and mail **OR** fax this form to the office shown at the bottom of this notice, **OR** fill out the electronic version via the NYSDOL website.

NOTICE OF COMPLETION / CANCELLATION OF PROJECT

Date Completed: _____ Date Cancelled: _____

Name & Title of Representative: _____

Phone: (518) 457-5589 Fax: (518) 485-1870
W. Averell Harriman State Office Campus, Bldg. 12, Room 130, Albany, NY 12240

ATTACHMENT "C"

SAMPLE - SUMMARY OF WORK ORDER

SAMPLE ONLY

Rochester, New York
Department of Environmental Services
t Lighting Bureau
h Ending October 1990

Work Order#	House & Street Location	Date Repaired	Total Labor Billed	Total Materials Billed	Total Work Order Billed
3097	59 Dorset Street(REPEAT)	10/11/90	N/C		N/C
3133	24 Cambridge St.	10/15/90	128.00	21.00	149.00
3146	VOID	- 0 -	- 0 -	- 0 -	- 0 -
3147	Main St. East & East Ave.	9/28/90	25.00	- 0 -	25.00
3151	138 Durnan Street	10/15/90	181.30	28.00	209.30
3152	29 Halstead St.	10/1/90	19.60	- 0 -	19.60
3153	116 Brookdale Ave.	10/1/90	19.60	- 0 -	19.60
3154	Garson Avenue	10/1/90	48.20	- 0 -	48.20
3155	Garson Ave. 4th St.Goodman	10/1/90	63.00	17.90	80.90
3156	60 Hall Street	10/1/90	19.60	- 0 -	19.60
3157	Opp 123 Drexmore Road	10/2/90	19.60	- 0 -	19.60
3158	52 Edgeland Street	10/2/90	19.60	- 0 -	19.60
3159	54 Dickinson Street	10/4/90	19.60	- 0 -	19.60
	224 Portage Street	10/4/90	19.60	- 0 -	19.60
3161	38 Kingsboro Road	10/4/90	19.60	- 0 -	19.60
3162	196 Depew Street	10/4/90	19.60	- 0 -	19.60
3162	REPEAT	10/8/90	N/C	- 0 -	N/C
3163	267 Flower City Park	10/6/90	48.00	- 0 -	48.00
3164	Averill AveESidels of SoAv	10/31/90	48.00	- 0 -	48.00
3165	662 Averill Avenue	10/26/90	128.00	21.00	149.00
3166	715 Averill Avenue	10/26/90	128.00	21.00	149.00
3167	543 S. Goodman Street	10/25/90	128.00	21.00	149.00
3168	Opp. 24 Dunsmere Dr.	10/15/90	48.00	- 0 -	48.00
3169	55 Parkwood Rd.	10/15/90	48.00	- 0 -	48.00
3170	45 Wendell Street	10/5/90	19.60	- 0 -	19.60
3171	Willowbank Place	10/4/90	19.60	- 0 -	19.60
Page 1 Total			1,237.90	129.90	1,367.00

ATTACHMENT "D"

STANDARD DRAWINGS - STREET LIGHTING

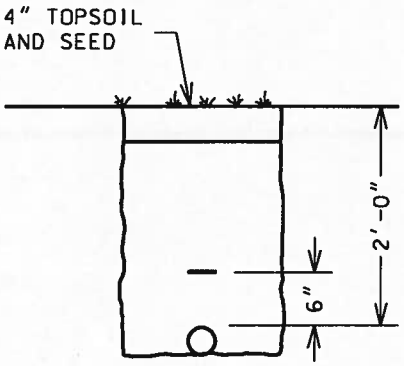

LAWN AREA

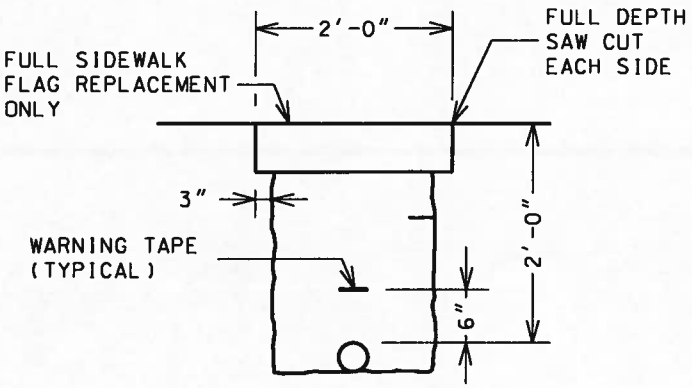

DRIVEWAY OR SIDEWALK CROSSING

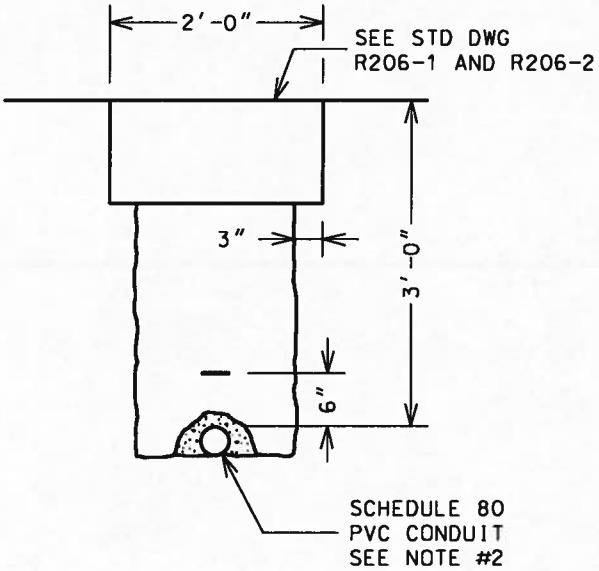

ROADWAY CROSSING

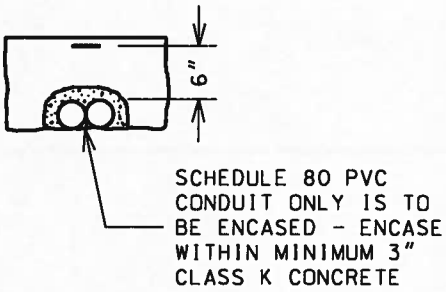

MULTIPLE CONDUITS

NOTES:

1. ALL CONDUIT RUNS ARE TO DRAIN INTO THE PULLBOX.
2. IF REQUIRED BY PROJECT MANAGER, CONDUIT FOR ROADWAY CROSSINGS IS TO BE ENCASED WITHIN CLASS K CONCRETE - FROM PULLBOX TO PULLBOX, OR FROM PULLBOX TO LIGHT POLE.

CITY OF ROCHESTER	
CONDUIT TRENCH	
ISSUED 9-2-91	STD. DWG.
REVISED 4-28-06	NO. R671-1

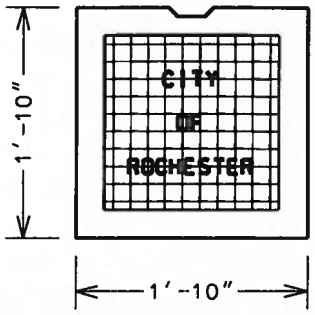

CAST IRON COVER

WEIGHT OF COVER 85 POUNDS

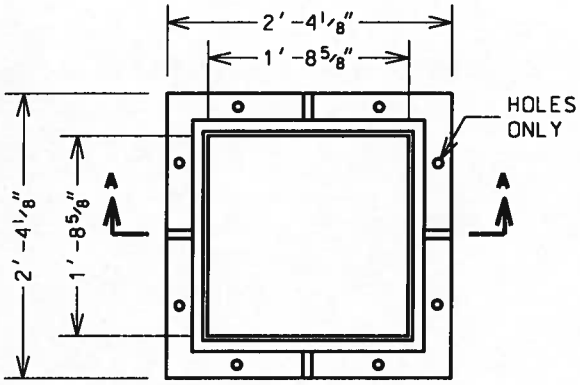

CAST IRON FRAME

WEIGHT OF FRAME 105 POUNDS

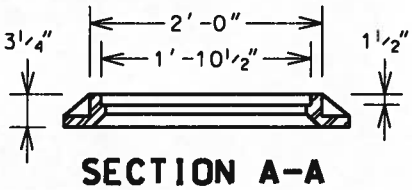

SECTION A-A

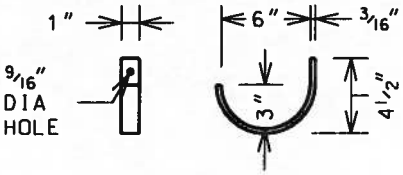

STEEL CABLE BRACKET SUPPORT

HOT DIPPED GALVANIZED

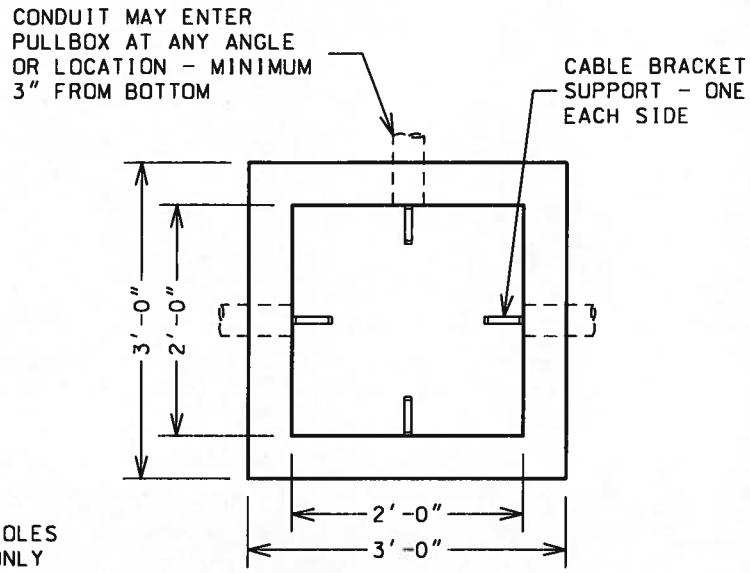

PULLBOX PLAN

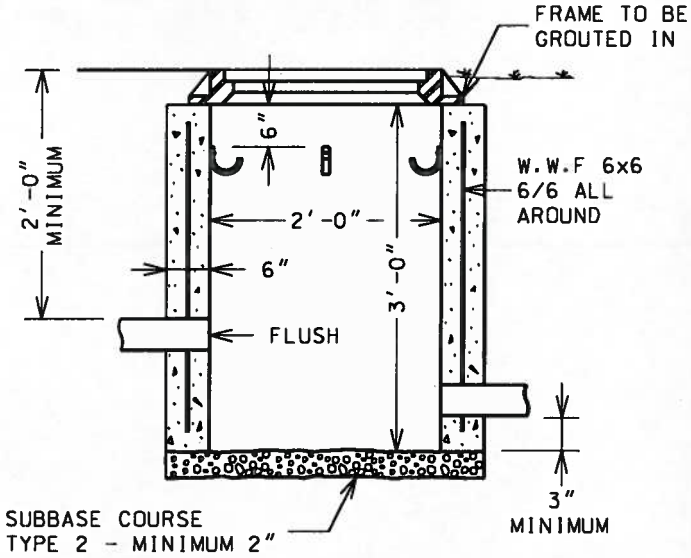

PULLBOX SECTION

NOTES:

1. PULLBOX IS TO BE MADE OF CAST-IN-PLACE OR PRECAST CLASS K CONCRETE.
2. FRAME AND COVER ARE TO BE GRAY CAST IRON PER ASTM A48 CLASS 30 IN CONFORMANCE WITH THE REQUIREMENTS OF NYSDOT SECTION 715-05.
3. SIZE OF LETTERS TO BE 2 INCH.
4. TOP OF PULLBOX TO BE SET FLUSH IN PAVED AREA AND 1 INCH ABOVE GRADE IN LAWN AREA.

CITY OF ROCHESTER	
CONCRETE PULLBOX (24 INCH)	
ISSUED 9-2-91	STD. DWG.
REVISED 4-28-06	NO. R671-2

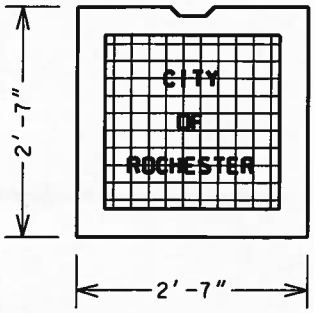

CAST IRON COVER

WEIGHT OF COVER 220 POUNDS

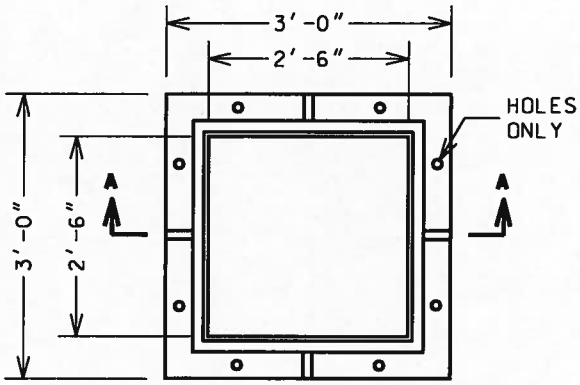

CAST IRON FRAME

WEIGHT OF FRAME 145 POUNDS

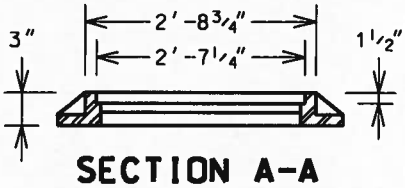

SECTION A-A

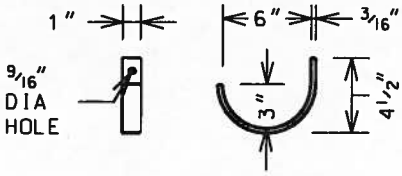

STEEL CABLE BRACKET SUPPORT

HOT DIPPED GALVANIZED

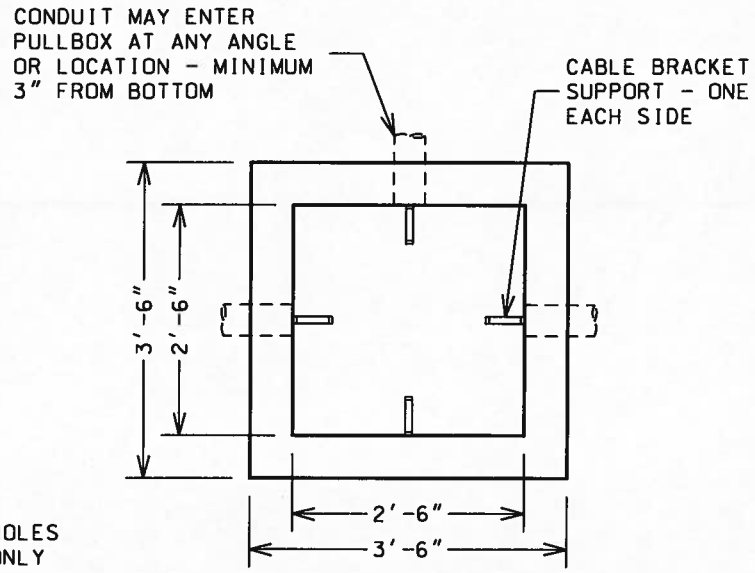

PULLBOX PLAN

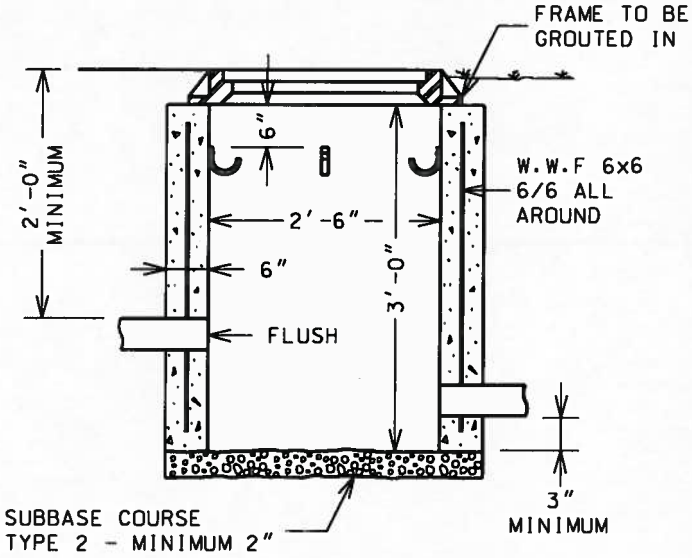

PULLBOX SECTION

NOTES:

1. PULLBOX IS TO BE MADE OF CAST-IN-PLACE OR PRECAST CLASS K CONCRETE.
2. FRAME AND COVER ARE TO BE GRAY CAST IRON PER ASTM A48 CLASS 30 IN CONFORMANCE WITH THE REQUIREMENTS OF NYSDOT SECTION 715-05.
3. SIZE OF LETTERS TO BE 2 INCH.
4. TOP OF PULLBOX TO BE SET FLUSH IN PAVED AREA AND 1 INCH ABOVE GRADE IN LAWN AREA.

CITY OF ROCHESTER	
CONCRETE PULLBOX (30 INCH)	
ISSUED 9-2-91	STD. DWG.
REVISED 4-28-06	NO. R671-3

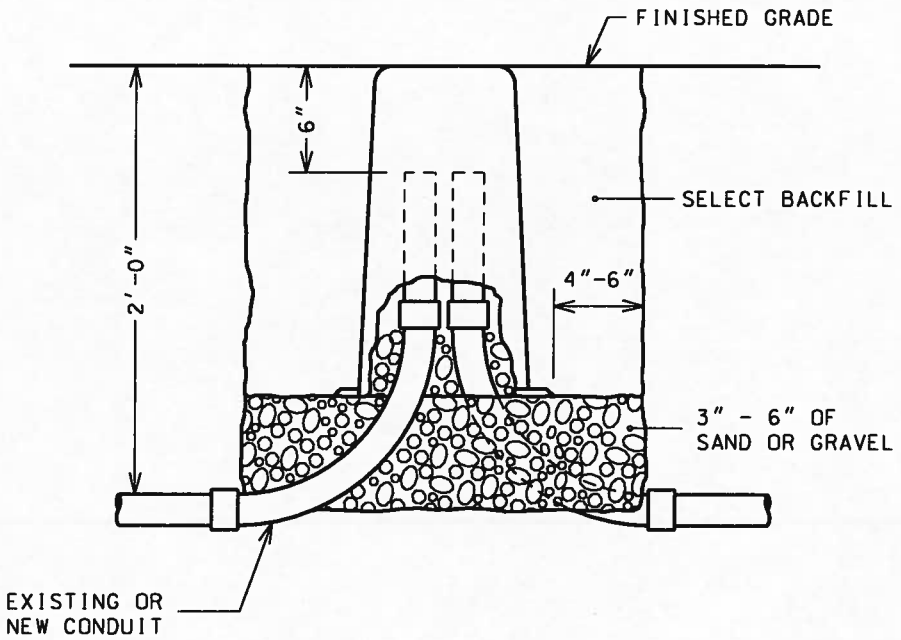

NOTES:

1. PLACE 3 TO 6 INCHES OF SAND OR GRAVEL IN BOTTOM OF EXCAVATION.
2. IF NECESSARY, USE CONDUIT EXTENSION AND COUPLING TO EXTEND EXISTING CONDUIT TO FINISHED GRADE.
3. PULLBOX WILL BE AS PROVIDED BY THE CITY.
4. PULLBOX WITH CONCRETE RING AND STEEL COVER WILL BE USED FOR INSTALLATION IN PAVED AREAS.

CITY OF ROCHESTER	
FIBERGLASS PULLBOX INSTALLATION	
ISSUED 9-2-91	STD. DWG.
REVISED 4-28-06	NO. R671-4

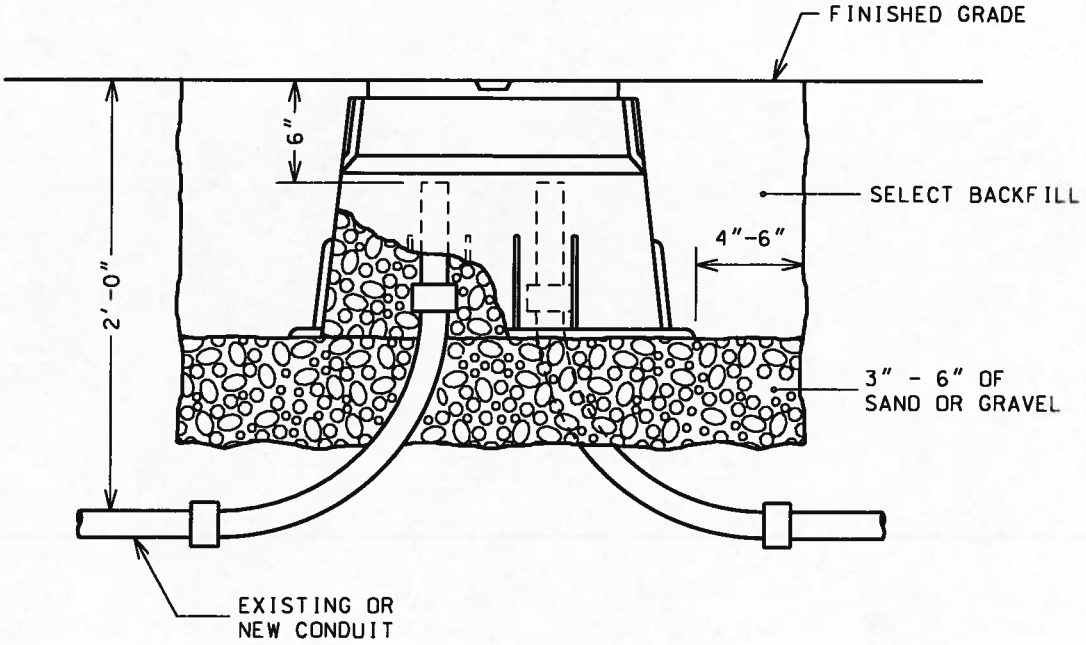

NOTES:

1. PLACE 3 TO 6 INCHES OF SAND OR GRAVEL IN BOTTOM OF EXCAVATION.
2. IF NECESSARY, USE CONDUIT EXTENSION AND COUPLING TO EXTEND EXISTING CONDUIT TO FINISHED GRADE.
3. HANDHOLE WILL BE AS PROVIDED BY THE CITY.

CITY OF ROCHESTER	
FIBERGLASS HANDHOLE INSTALLATION	
ISSUED 9-2-91	STD. DWG.
REVISED 4-28-06	NO. R671-5

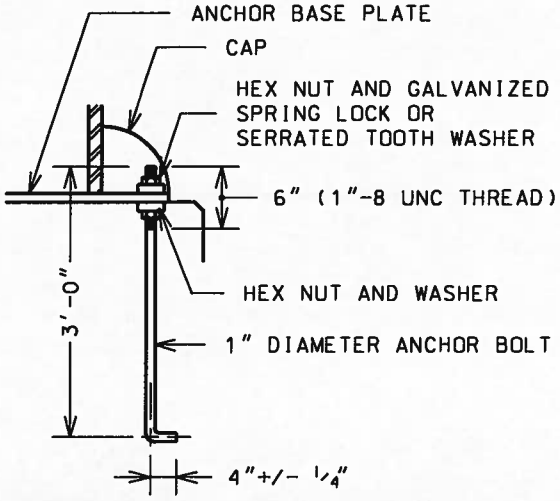

ANCHOR BOLT

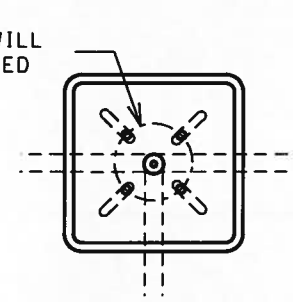

TOP VIEW

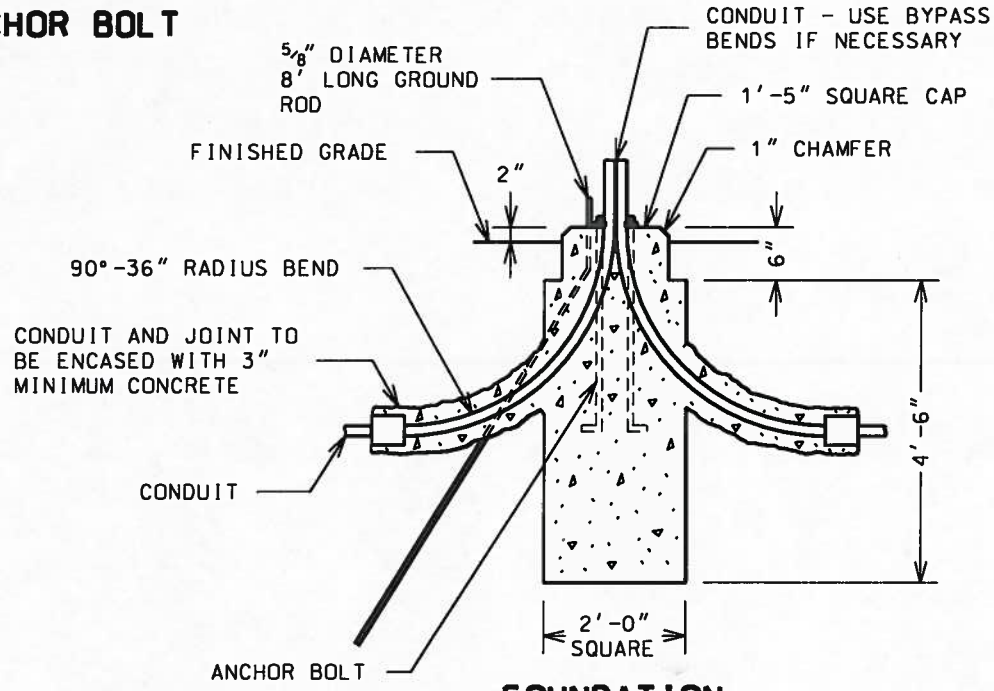

FOUNDATION

NOTES:

1. FOUNDATION TO BE MADE OF CLASS K CONCRETE. TOP OF FOUNDATION TO BE 2 INCHES ABOVE FINISHED GRADE.
2. GROUND ROD TO BE DRIVEN INTO UNDISTURBED EARTH ADJACENT TO FOUNDATION AND BENT INTO FOUNDATION TOP. TOP OF GROUND ROD TO EXTEND 4 INCHES ABOVE TOP OF FOUNDATION.
3. ANCHOR BOLTS TO BE IN ACCORDANCE WITH ASTM F1554 GRADE 55. TOP OF ANCHOR BOLTS TO EXTEND 3 INCHES ABOVE TOP OF FOUNDATION.
4. TOP OF CONDUIT TO EXTEND 9 INCHES ABOVE TOP OF FOUNDATION.
5. SUPPLY TWO LEVELING SHIMS WITH EACH ANCHOR BOLT FOR LEVELING BASE PLATE AND TO PLUMB POLE.

CITY OF ROCHESTER	
METAL POLE FOUNDATION	
ISSUED 9-2-91	STD. DWG.
REVISED 4-28-06	NO. R671-6

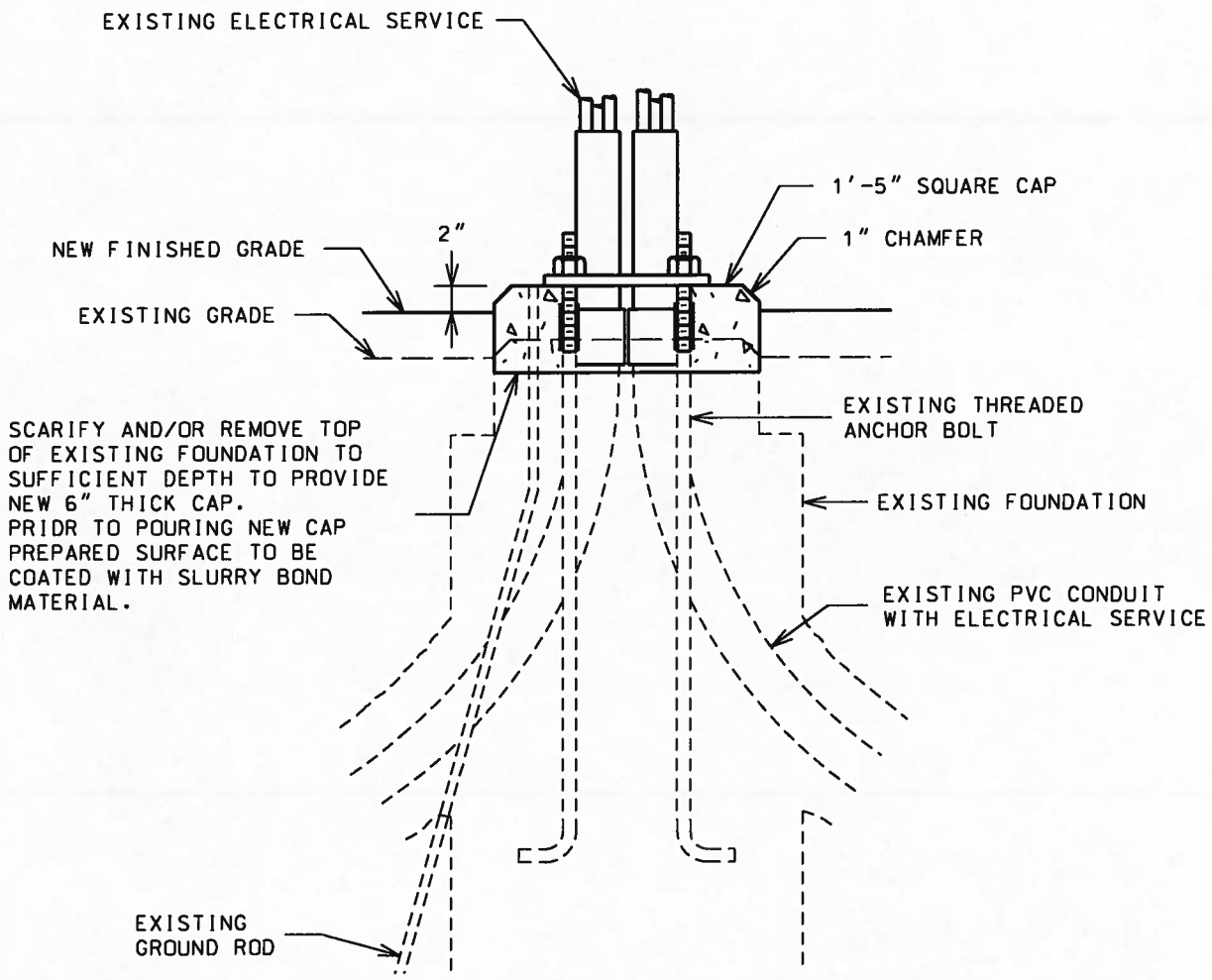

NOTES:

1. NEW CAP TO BE MADE OF CLASS K CONCRETE. TOP OF NEW CAP TO BE 2 INCHES ABOVE FINISHED GRADE.
2. EXISTING ANCHOR BOLTS ARE TO BE EXTENDED AS NECESSARY USING NEW GALVANIZED THREADED NIPPLES AND COUPLINGS. TOP OF ANCHOR BOLTS TO EXTEND 3 INCHES ABOVE TOP OF FOUNDATION.
3. EXISTING CONDUIT IS TO BE EXTENDED AS NECESSARY USING NEW PVC SCHEDULE 40 PIPE EXTENSIONS AND COUPLINGS. TOP OF CONDUIT TO EXTEND 9 INCHES ABOVE TOP OF FOUNDATION.
4. SUPPLY TWO NEW LEVELING SHIMS FOR EACH EXISTING ANCHOR BOLT FOR LEVELING BASE PLATE AND TO PLUMB POLE.

CITY OF ROCHESTER	
METAL POLE FOUNDATION EXTENSION ADJUSTMENT	
ISSUED 9-2-91	STD. DWG.
REVISED 4-28-06	NO. R671-7

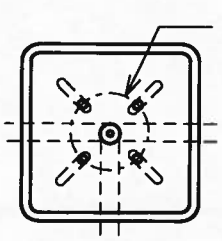

TOP VIEW

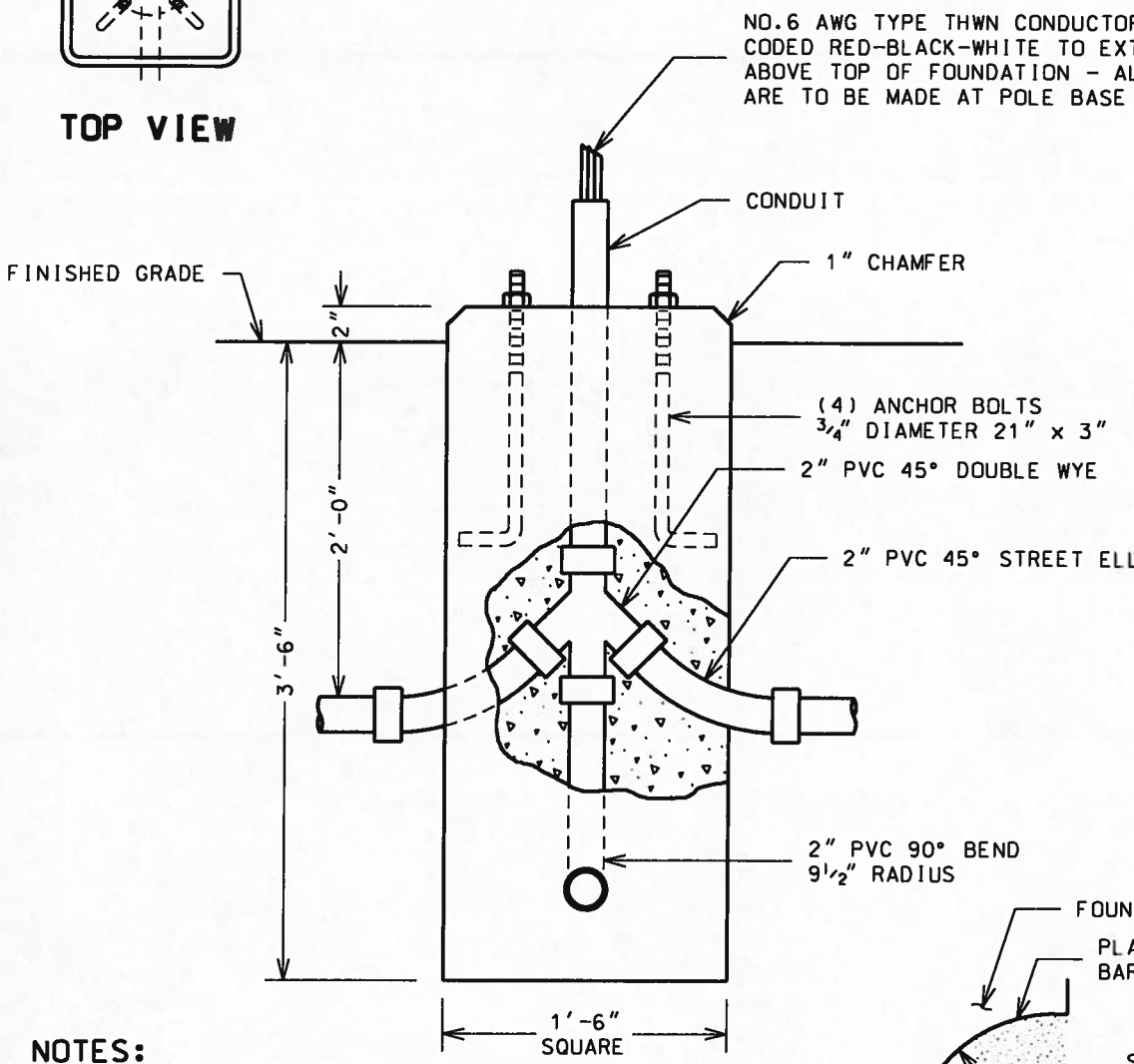

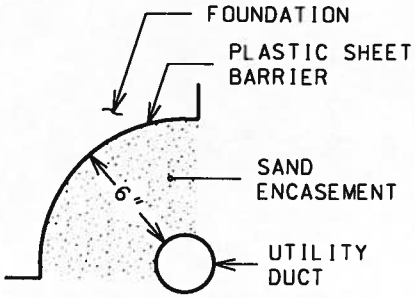

UTILITY CONFLICT

NOTES:

1. FOUNDATION TO BE MADE OF CLASS K CONCRETE. TOP OF FOUNDATION TO BE 2 INCHES ABOVE FINISHED GRADE.
2. TOP OF ANCHOR BOLTS TO EXTEND 2 INCHES ABOVE TOP OF FOUNDATION.
3. TOP OF CONDUIT TO EXTEND 6 INCHES ABOVE TOP OF FOUNDATION.
4. ALL CONDUIT CONNECTIONS IN FOUNDATION TO HAVE DOUBLE WYE TYPE OPENING.
5. SUPPLY TWO NEW LEVELING SHIMS FOR EACH EXISTING ANCHOR BOLT FOR LEVELING BASE PLATE AND TO PLUMB POLE.
6. "SONOTUBES" ARE NOT ALLOWED FOR FORMING OF FOUNDATION, UNLESS OTHERWISE SPECIFICALLY APPROVED FOR USE BY THE CITY.

CITY OF ROCHESTER

FIBERGLASS POLE CAST-IN-PLACE FOUNDATION

ISSUED	9-2-91	STD. DWG.
REVISED	4-28-06	NO. R671-8

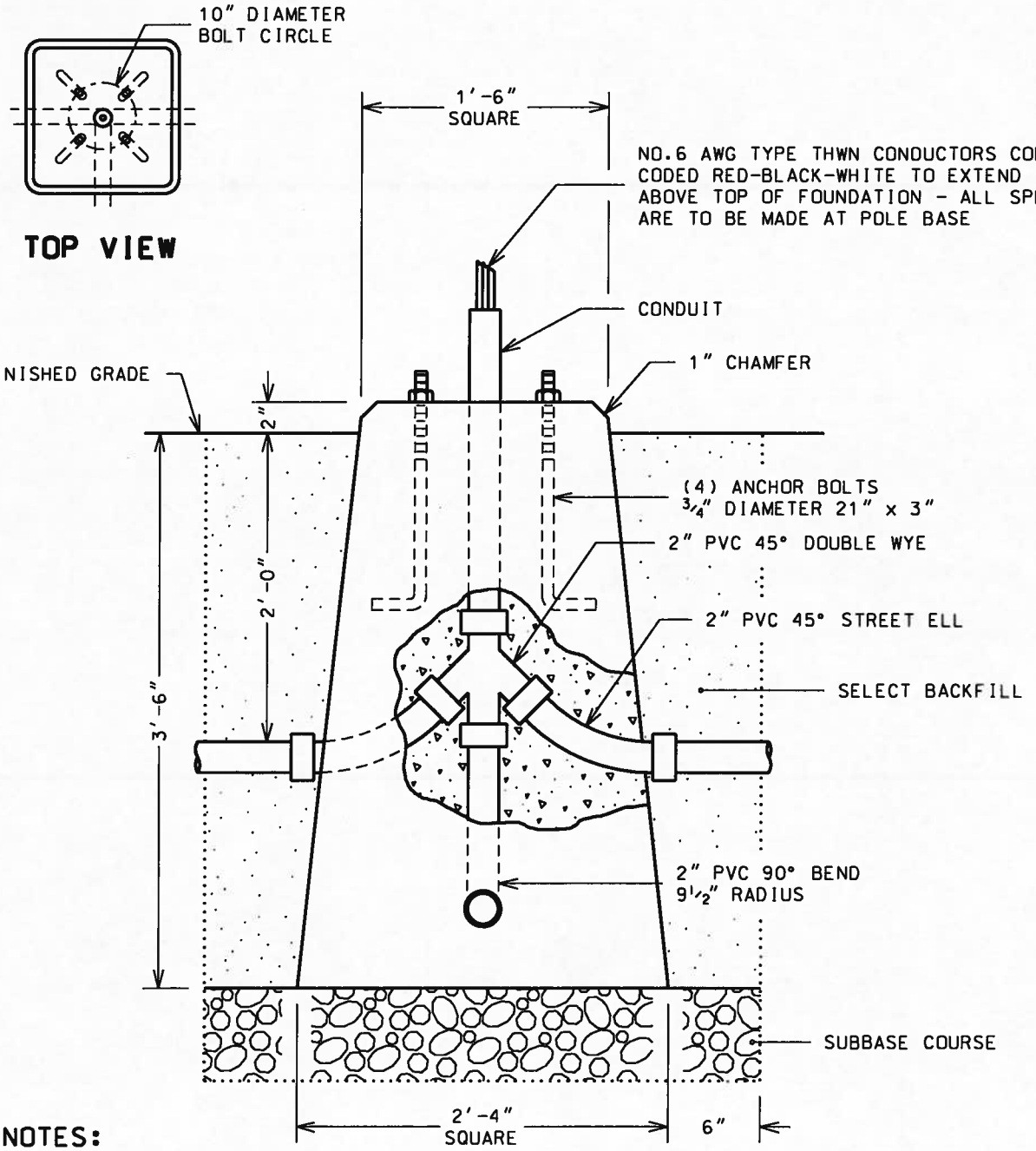

NOTES:

1. FOUNDATION TO BE MADE OF CLASS K CONCRETE. TOP OF FOUNDATION TO BE 2 INCHES ABOVE FINISHED GRADE.
2. TOP OF ANCHOR BOLTS TO EXTEND 2 INCHES ABOVE TOP OF FOUNDATION.
3. TOP OF CONDUIT TO EXTEND 6 INCHES ABOVE TOP OF FOUNDATION.
4. ALL CONDUIT CONNECTIONS IN FOUNDATION TO HAVE DOUBLE WYE TYPE OPENING.
5. SUPPLY TWO NEW LEVELING SHIMS FOR EACH EXISTING ANCHOR BOLT FOR LEVELING BASE PLATE AND TO PLUMB POLE.

CITY OF ROCHESTER	
FIBERGLASS POLE PRECAST FOUNDATION	
ISSUED 9-2-91	STD. DWG.
REVISED 4-28-06	NO. R671-9

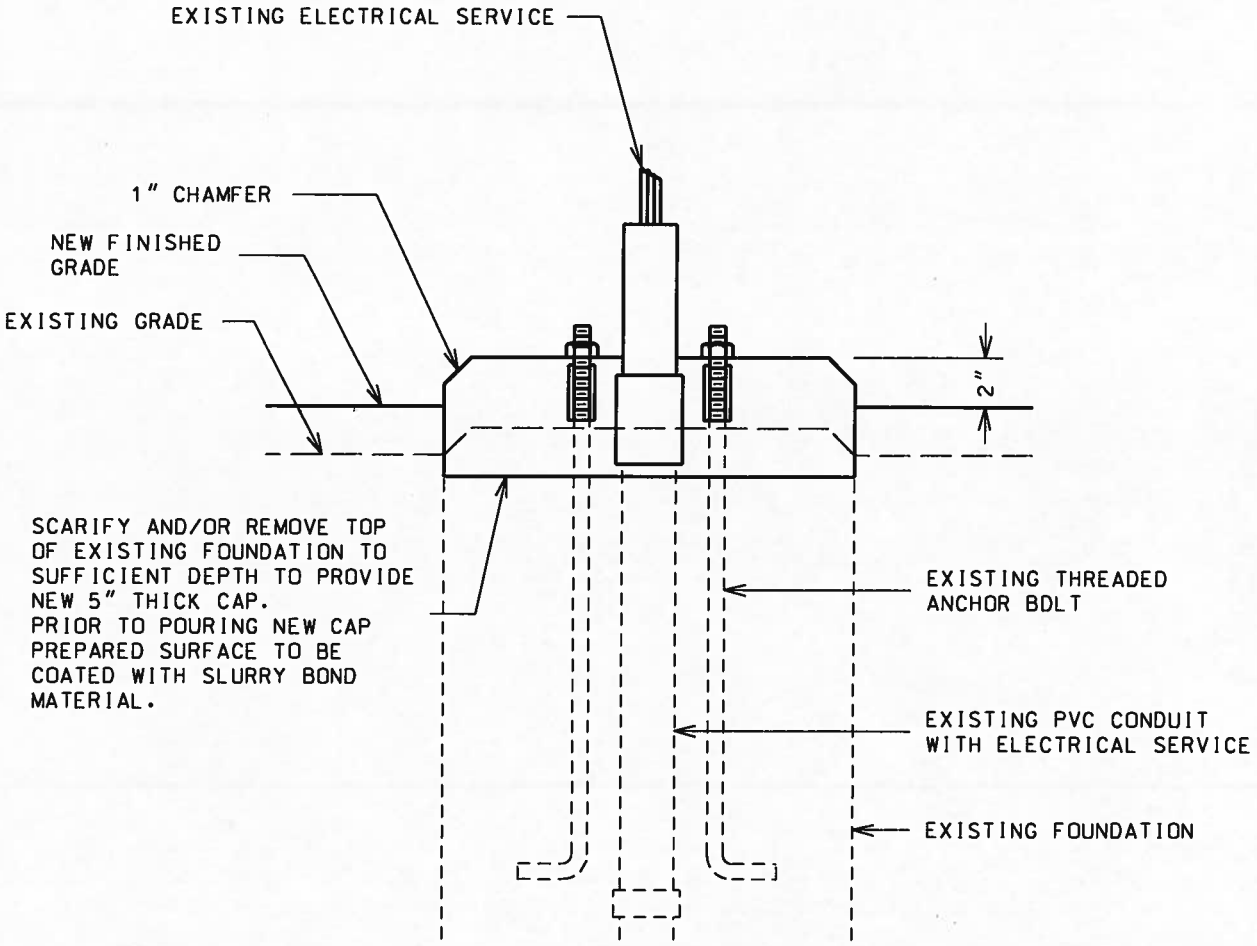

NOTES:

1. NEW CAP TO BE MADE OF CLASS K CONCRETE. TOP OF NEW CAP TO BE 2 INCHES ABOVE FINISHED GRADE.
2. EXISTING ANCHOR BOLTS ARE TO BE EXTENDED AS NECESSARY USING NEW GALVANIZED THREADED NIPPLES AND COUPLINGS. TOP OF ANCHOR BOLTS TO EXTEND 2 INCHES ABOVE TOP OF FOUNDATION.
3. EXISTING CONDUIT IS TO BE EXTENDED AS NECESSARY USING NEW PVC SCHEDULE 40 PIPE EXTENSIONS AND COUPLINGS. TOP OF CONDUIT TO EXTEND 6 INCHES ABOVE TOP OF FOUNDATION.
4. SUPPLY TWO NEW LEVELING SHIMS FOR EACH EXISTING ANCHOR BOLT FOR LEVELING BASE PLATE AND TO PLUMB POLE.

CITY OF ROCHESTER	
FIBERGLASS POLE FOUNDATION EXTENSION ADJUSTMENT	
ISSUED 9-2-91	STD. DWG.
REVISED 4-28-06	NO. R671-10

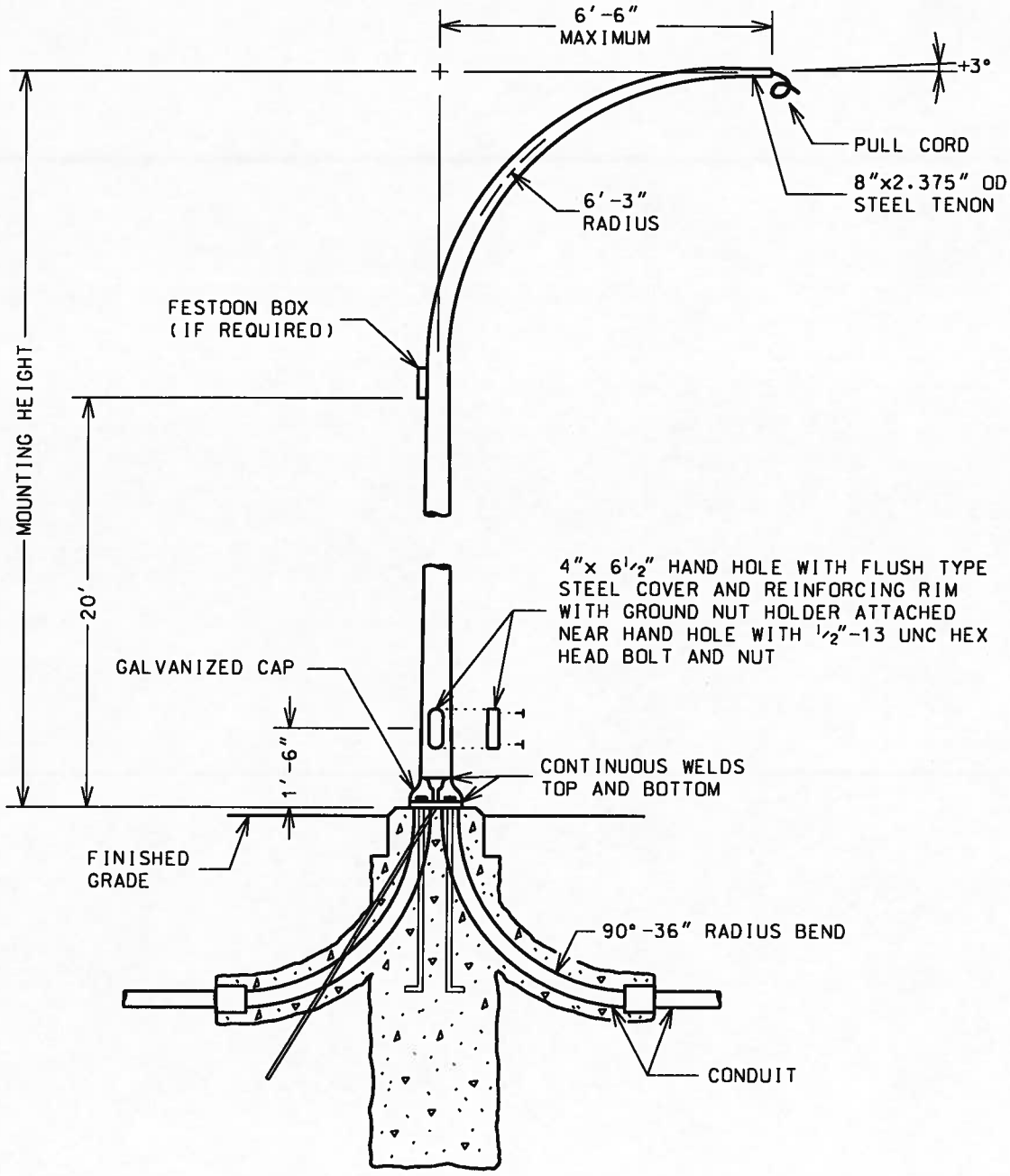

NOTES:

1. ANCHOR BASE PLATE DIMENSIONS WILL BE SUPPLIED BY CITY STREET LIGHTING DIVISION.
2. POLE SHAFT TO CONFORM TO ASTM A595 GRADE A 11 GAUGE GALVANIZED STEEL PER ASTM A123 AND A153, ONE-PIECE CONSTRUCTION, ROUND IN SECTION, UNIFORM SHAFT TAPER OF 0.14"/FOOT OF LENGTH AND MINIMUM YIELD STRENGTH OF 48,000 PSI.
3. SEE STD.DWG. R671-6 FOR DETAIL OF FOUNDATION.
4. SEE STD.DWG.R671-15 FOR DETAIL OF FESTOON BOX.

CITY OF ROCHESTER	
DAVIT POLE SINGLE ARM	
ISSUED 9-2-91	STD. DWG.
REVISED 4-28-06	NO. R671-11

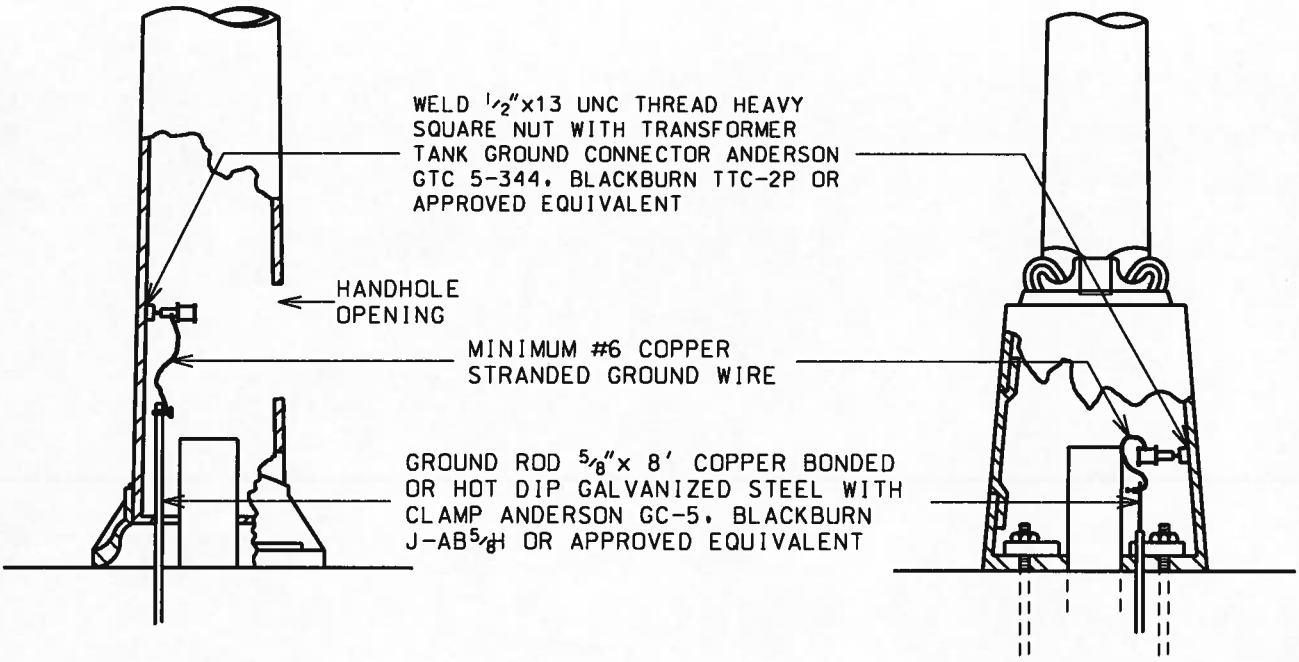

ANCHOR BASE

TRANSFORMER BASE

CITY OF ROCHESTER	
DAVIT POLE GROUNDING	
ISSUED 9-2-91	STD. DWG.
REVISED 4-28-06	NO. R671-13

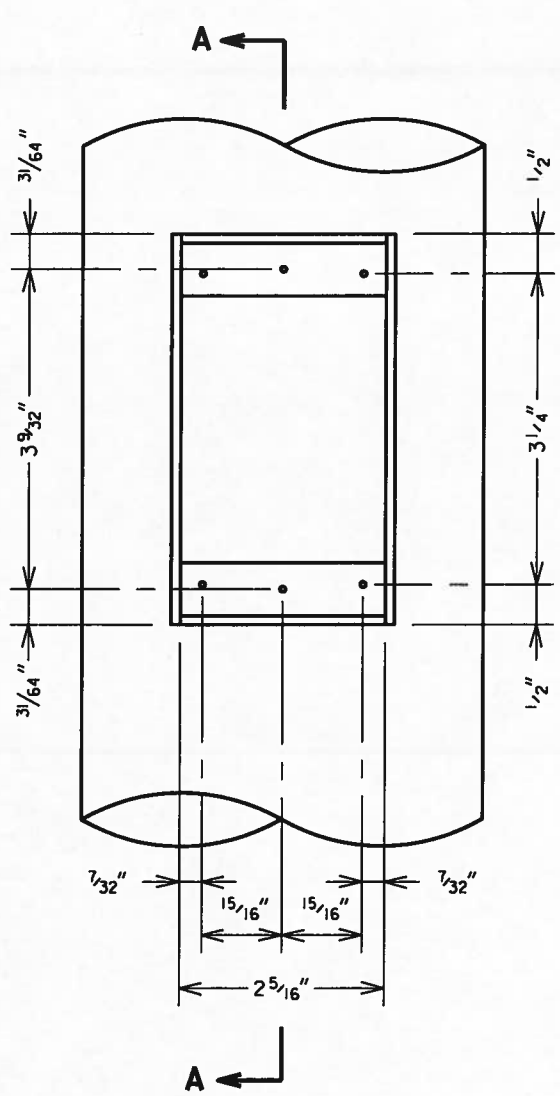

FRONT VIEW

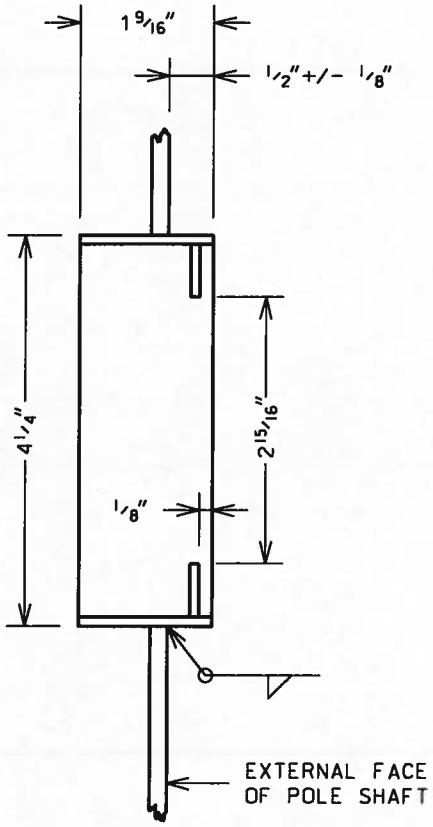

SECTION A-A

NOTES:

FESTOON BOX TO BE FABRICATED FROM 12 GAUGE COMMERCIAL GRADE STEEL, WITH 18 GAUGE GALVANIZED OR STAINLESS SCREWS.

CITY OF ROCHESTER	
FESTOON BOX	
ISSUED 9-2-91	STD. DWG.
REVISED 4-28-06	NO. R671-15

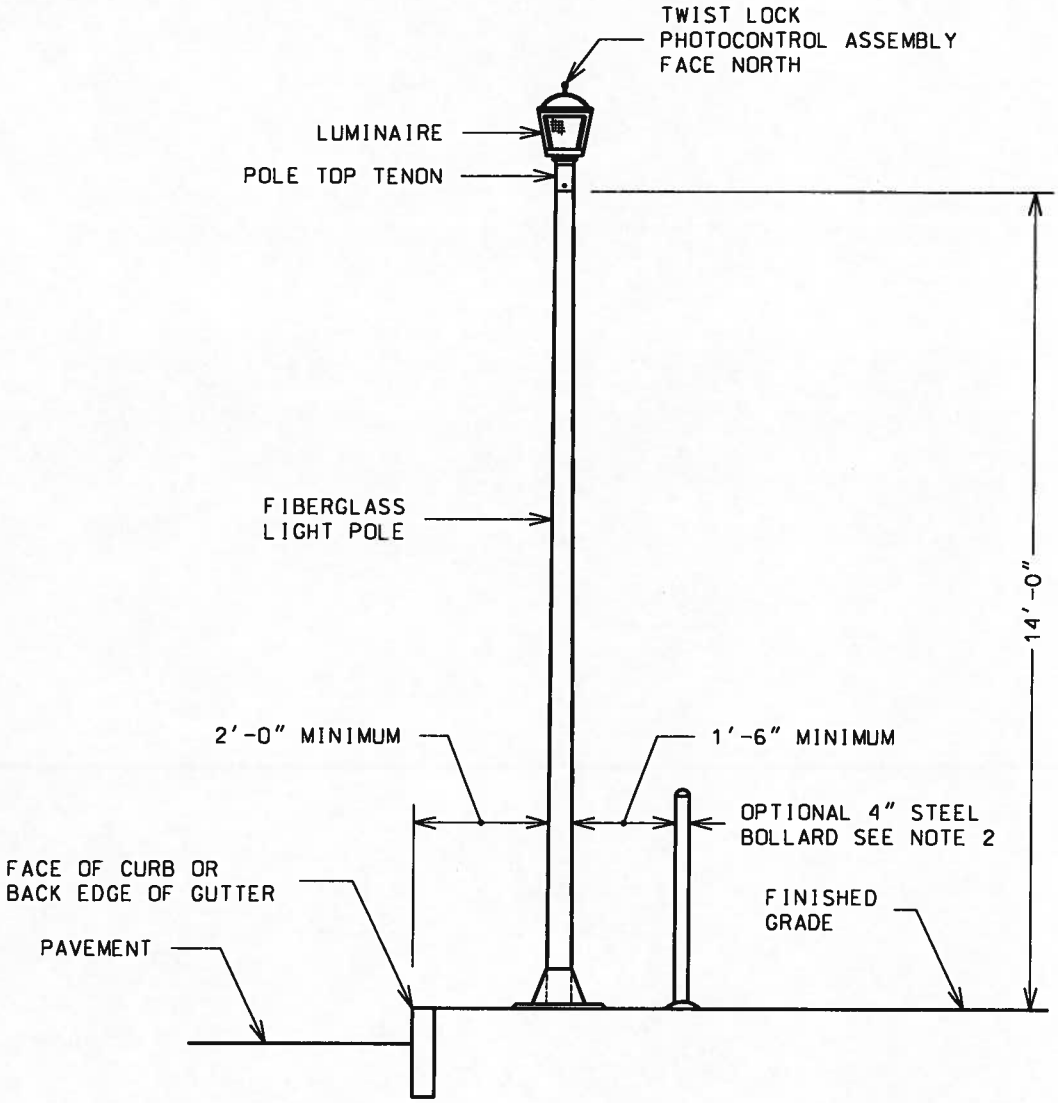

NOTES:

1. PRISMATIC REFRACTOR HAS A "STREET SIDE" AND A "HOUSE SIDE" WITH MARKINGS INDICATING LOCATION OF RIBS. REFRACTOR IS TO BE ORIENTED PROPERLY IN LUMINAIRE WHEN INSTALLED ON POLE.

2. BOLLARDS WILL BE INSTALLED ONLY IF REQUIRED AS SHOWN ON THE PLANS. BOLLARDS ARE NOT NORMALLY INSTALLED WITH LIGHT POLES.

CITY OF ROCHESTER	
FIBERGLASS LIGHT POLE AND LUMINAIRE INSTALLATION	
ISSUED 9-2-91	STD. DWG.
REVISED 4-28-06	NO. R671-16

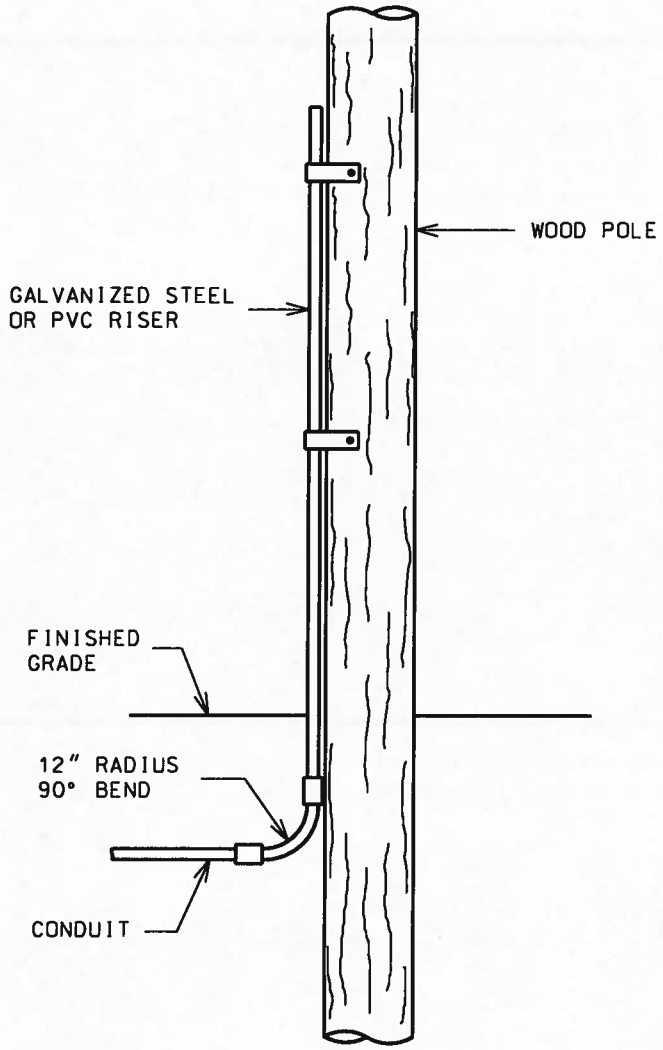

NOTES:

RISER IS TO BE PROPERLY GROUNDED AND IS TO EXTEND TO THE FUSE POINT LOCATED ON THE WODD POLE

CITY OF ROCHESTER	
CONNECTION TO WOOD POLE	
ISSUED 9-2-91	STD. DWG.
REVISED 4-28-06	NO. R671-17

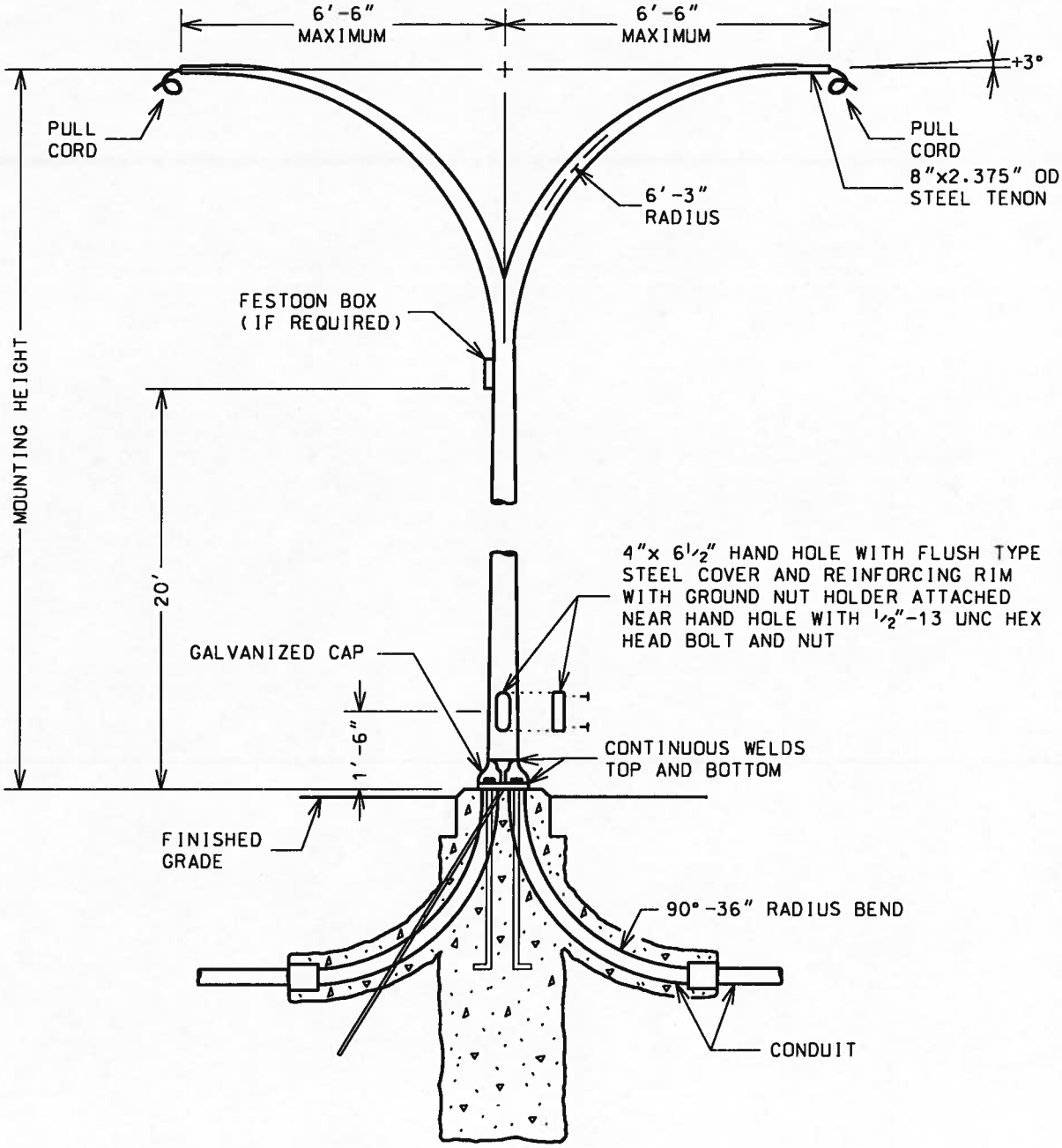

NOTES:

1. ANCHOR BASE PLATE DIMENSIONS WILL BE SUPPLIED BY CITY STREET LIGHTING DIVISION.
2. POLE SHAFT TO CONFORM TO ASTM A595 GRADE A 11 GAUGE GALVANIZED STEEL PER ASTM A123 AND A153, ONE-PIECE CONSTRUCTION, ROUND IN SECTION, UNIFORM SHAFT TAPER OF 0.14"/FOOT OF LENGTH AND MINIMUM YIELD STRENGTH OF 48,000 PSI.
3. SEE STD.DWG. R671-6 FOR DETAIL OF FOUNDATION.
4. SEE STD.DWG.R671-15 FOR DETAIL OF FESTOON BOX.

CITY OF ROCHESTER	
DAVIT POLE TWIN ARM	
ISSUED 4-28-06	STD. DWG.
REVISED	NO. S671-18

ATTACHMENT "E"

CONFIDENTIAL QUESTIONNAIRE

CONFIDENTIAL QUESTIONNAIRE

(TO BE COMPLETED ONLY IF REQUESTED BY THE CITY ENGINEER OR PURCHASING AGENT)

STATEMENT OF BIDDER'S QUALIFICATIONS

All questions must be answered and the date shown must be clear and comprehensive. This questionnaire must be notarized. The person signing this questionnaire certifies the truth and accuracy of all statements and of all answers to questions made hereinafter. If necessary, questions may be answered on separate attached sheets. The Bidder may submit any additional information he/she desires.

PRINT OR TYPE ALL INFORMATION EXCEPT FOR SIGNATURES.

Project Title: _____

Name of Bidder to be qualified _____

Address: _____

_____

Telephone: _____

1. The Bidder is a (check one): ___Individual; ___ Partnership; ___ Corporation

   incorporated in the State of _____; ____ joint venture consisting of

   _____

   _____

   _____

2. List the names of all officers of your firm or corporation and the principal stockholders:

   _____

   _____

   _____

3. What is the dollar value of the largest contract that you have been awarded and completed within the last five (5) years? Also include the name of the job; where it was located, for whom it was done and the name and telephone number of references. (Attach additional sheets if more space is needed).

_____

_____

4. Are you engaged in any other contract work at the present time?

Yes_____ No _____

If "Yes", complete the information required below and give the total value of work now under contract. Total value of all work presently under contract and value of uncompleted parts of the work as of the date of filing is:

Total Value: $_____; Uncompleted to date: $_____

In the event that you are not engaged in any work at present, furnish names and telephone numbers of at least three references concerning your past experience.

Name of Project _____ Bid Price $_____

Client _____ Estimated Completion Date_____

Name of Project _____ Bid Price $_____

Client _____ Estimated Completion Date_____

Name of Project _____ Bid Price $_____

Client _____ Estimated Completion Date_____

5. Has your firm or corporation or any members of the firm or corporation been involved in any of the following within the last three (3) years?

Yes_____ No_____

a) Assessment of liquidated damages
b) Default on a contract
c) Denial of award of contract by any public agency
d) Ineligibility to bid on any public project
e) Assignment of monies earned under a contract

If "Yes", explain in detail: _____

_____

_____

_____

6. Have you necessary financial resources to undertake this Project without dependence on guarantee or bank credit? Yes_____ No _____. If "No", explain

_____

_____

_____

7. Do you intend to make an assignment of the monies due under this Contract? Yes_____No _____.
If "Yes", what bank? _____

_____

8. In what manner have you inspected this Project? Explain in detail:

_____

_____

_____

_____

9. Please give the names and experience of personnel who will handle your field work on this Project.

Project Superintendent: _____

_____

_____

Others: _____

_____

_____

10. What work will you perform on Site and with your own forces (indicate here major items of work and dollar value of items listed)?

Item	Dollar Value
_____	_____
_____	_____
_____	_____

11. What percentage of the entire job will you do with your own forces? _____%

12. How many of your own workmen do you have available for this Project?

_____

13. If you will be using a bonding company other than the company which supplied you Bid Bond, please identify.

_____

_____

14. What part of the Work do you plan on subletting (indicate here major items of work and dollar value of the items listed)?

Item of work_____ Value $_____

Name of Subcontractor_____

Address_____

Item of work_____ Value $_____

Name of Subcontractor_____

Address_____

Item of work_____ Value $_____

Name of Subcontractor_____

Address_____

15. What percentage of the dollar value of the entire job does this represent? _____%

16. List below the number and types of construction equipment, in good working condition, which is owned by you and will be used for this Project:

Type	Number	Age of Equipment