City of Rochester
Department of Finance
City Hall Room 105A, 30 Church Street
Rochester, New York 14614-1281
www.cityofrochester.gov

_____
PRINTED NAME OF BIDDER

INVITATION TO BID - SINGLE PURCHASE

PRECAST ROCHESTER STYLE CONCRETE PLANTERS

Invitation to Bid No. 120000 Issued: May 21, 2012

PURCHASING BUREAU CONTACT: Roslyn Phillips, CPPB, Purchaser, 585-428-7042

Bid Opening: Monday, June 4, 2012 at 11:00 a.m.

Sealed Bids are to be returned to the Office of the Purchasing Agent, City Hall Room 105A, Rochester, NY 14614, prior to bid opening, at which time and place all bids will be opened, read and recorded.

The bidder's attention is directed to the General Conditions and Instructions to Bidders which appear immediately following this title page and are incorporated into the bidding document and contract by reference.

CONTRACT CHARACTERISTICS
(For definitions or explanations, see General Conditions)

Type of Contract: ONE TIME BUY

Bid Deposit Requirement: NONE

Performance Security Requirement: NONE

Insurance Requirement: NONE

Samples Requirement: NONE

Descriptive Literature/Technical Data Requirement: PER SECTION 2:3

BIDDERS: Please note that prices, company identification and authorized signature are to be entered on the Proposal which appears at the end of the specifications.

City of Rochester

Bureau of Purchasing

Department of Finance

GENERAL CONDITIONS AND INSTRUCTIONS TO BIDDERS

(Vendor: The general rules and conditions which follow apply to all purchases and become a definite part of each formal invitation to bid, purchase order or other award issued by the City Purchasing Agent, unless otherwise specified. Bidders or their authorized representative are expected to fully inform themselves as to the conditions, requirements and specifications before submitting bids. Failure to do so will be at the bidder's own risk and he cannot secure relief on the plea of error.)

Subject to applicable Federal, State and Local laws, ordinances, rules, regulations and limitations, bids on all advertisements and invitations issued by the Department of Finance, Purchasing Bureau will bind bidders to applicable conditions and requirements herein set forth unless otherwise specified in the Invitation to Bid.

CONDITIONS OF BIDDING

1. **Proposal Forms**: Bids shall be submitted only on the forms provided by the City. The bidder shall retain one copy for his files and submit two (2) copies signed and sealed in the envelope provided by the City for that purpose. When using an envelope other than the one provided by the City, the following required information must be entered in the lower left corner on the face of the envelope: Bid Number, Bid Title, Bid Open Date and Time, and Submitted By. The envelope must be mailed or hand delivered to the Office of the Purchasing Agent, City Hall, Room 105A, 30 Church St., Rochester, NY 14614.

2. **Late Bids**: Formal bids, amendments thereto, or requests for withdrawal of bids received by the City after time specified for bid opening will not be considered.

3. **Withdrawal of Bids**: A written request for the withdrawal of a bid or any part thereof may be granted if the request is received by the City prior to the specified time of opening.

4. **Mailing of Bids**: Bids which are to be publicly opened will have attached a special mailing envelope which must be used by bidders in presenting such bids. In the event that the bid contains bulky subject material, the special mailing envelope must be firmly affixed to any other wrapper being used. Bids not received in the actual office of the Purchasing Agent at the time established for bid opening will not be considered, even if mailed earlier.

5. **Completeness**: All information required by Invitation to Bid must be supplied to constitute a proper bid.

6. **Bids Binding 45 Days**: Unless otherwise specified, all formal bids submitted shall be binding for forty-five (45) days following bid opening date unless the bidder(s), upon request of the Purchasing Agent, agrees to an extension.

7. **Conditional Bids**: Qualified bids are subject to rejection in whole or in part.

8. **Payment Terms**: Prompt payment discounts allowing less than thirty (30) days for discount to apply shall not be considered as a cost factor in the evaluation of bids. In connection with any

prompt payment discount offered, time will be computed from the date of receipt of correct invoice or receipt and acceptance of shipment, whichever is later.

9. **Bids for All or Part**: Unless otherwise specified by the City or by the bidder, the Purchasing Agent reserves the right to make award on all items, or on any of the items according to the best interests of the City. The Purchasing Agent shall further have the right to award separate items or groups to different vendors. Bidder may restrict his bid to consideration in the aggregate by so stating, but should name a unit price on each item bid upon; any bid in which the bidder names a total price of all the articles without quoting a price on each and every separate item may be rejected at the option of the City.

10. **Errors in Bids**: When an error is made in extending total prices, the unit bid price will govern. Carelessness in quoting prices, or in preparation of bid otherwise, will not relieve the bidder. Erasures or changes in bids should be initialed.

11. **Questions Re: Specifications**: Except for Public Works, any information relative to interpretation of specifications and drawings shall be requested of the Purchasing Agent, in writing, in ample time before the opening of bids.

    DO NOT MAKE INQUIRES BY PHONE OR IN PERSON.

    No inquiries, if received within five (5) days of the date set for the opening of bids, will be given any consideration. Any interpretation made to prospective bidders will be expressed in the form of an addendum to the specifications which, if issued, will be sent by ordinary or certified mail, at the City's option, to all prospective bidders no later than three (3) days before the date set for opening of bids. Oral answers will not be binding on the City.

12. **Response to Invitations**: In the event you cannot submit a bid on our requirements, as set forth in the "Invitation, Bid, and Agreement" attached hereto, please return the Invitation, Bid and Contract form with an explanation as to why you are unable to bid on these requirements. (Because of the large number of firms listed on the City's qualified lists of Bidders, it is necessary to delete from these lists the names of those persons, firms or corporation who fail to respond after having been invited to bid on a commodity or commodities for three successive bid openings). City reserves the right to delete.

13. **Multiple Bids**: No bidder will be allowed to offer more than one price on each item even though he may feel that he has two or more types or styles that will meet specifications. Bidders must determine for themselves which to offer. IF THE BIDDER SHOULD SUBMIT MORE THAN ONE PRICE ON ANY ITEM, ALL PRICES FOR THAT ITEM MAY BE REJECTED AT THE DISCRETION OF THE CITY PURCHASING AGENT.

14. **Taxes**: The City of Rochester is exempt from State and Local sales and use taxes under Certificate No. AC 946 and is exempt from paying Federal excise taxes.

15. ~~**Catalogs**: Each bidder shall submit in duplicate where necessary or when requested by the~~ Purchasing Agent, catalogs, descriptive literature, and detailed drawings, fully detailing features, designs, construction, finishes and the like necessary to fully describe the material or work he proposes to furnish.

16. **Competency of Bidder**: No proposal will be accepted from or contract awarded to any person, firm or corporation that is in arrears or is in default to the City upon any debt or contract, or that is a defaulter, as surety or otherwise, upon any obligation to said City or had failed to perform faithfully within the prior three (3) years of any contract with the City. The bidder must present within 48 hours of a request evidence satisfactory to the Purchasing Agent of performance ability

and possession of necessary facilities, pecuniary resources and adequate insurance to comply with the terms of these specifications and contract documents.

BID DEPOSIT

17. **Bid Bond, Cash, Certified or Cashier's Check**: When required, each bid shall be accompanied by a bid bond signed by a surety company authorized to do business in the State of New York, or by a cashier's check, certified business check, Treasurer's check or other direct obligation drawn on a responsible bank doing business in the United States, and shall be made payable to the City of Rochester, unless the bidder has on file with the Purchasing Agent an annual bid bond approved by the City with an uncommitted balance equal to the certified check requirements. When computing amount of Bid for Certified Check purposes, do NOT deduct for trade-ins. U.S. Postal Money Orders are acceptable in lieu of certified checks.

18. **Annual Bid Bonds**: Bidders who regularly do business with the City shall be permitted to file with the Purchasing Bureau an annual bid bond in the amount specified below. Such annual bonds shall be acceptable as surety in lieu of the furnishing of surety with each individual transaction.

    Annual bid bonds shall be in an amount as determined by the bidder, of no less than Three Thousand Five Hundred Dollars ($3,500.00). If at any time, the requirements of a specific bid invitation exceed the amount of the annual bid bond, or should the aggregate amount of the bid security requirements on all unresolved bids submitted by your firm exceed the amount of the annual bid bond, additional surety will be required in the appropriate sum.

19. **Performance Bond**: The successful bidder or bidders on this bid must furnish a performance bond as indicated on the bid cover, made out to the City of Rochester, prepared on an approved form or on a form supplied by an approved surety, as security for the faithful performance of his contract, within ten (10) days of his notification that his bid has been accepted. The surety thereon must be such surety company or companies as are authorized and licensed to transact business in the State of New York. Attorneys in fact who sign bid bonds must file with each bond a certified copy of their power of attorney to sign said bonds.

    The successful bidder or bidders, upon failure or refusal to furnish within ten (10) days after his notification the required performance bond, shall forfeit to the City of Rochester as liquidated damages their bid deposit. At its option, the City shall have the right to accept cash, certified checks, letters of credit or such other security as the City deems appropriate in satisfaction of the foregoing bond requirements.

20. **Samples**: The samples submitted by bidders on items which they have received an award may be retained by the City until the delivery of contracted items is completed and accepted. Bidders whose samples are retained may remove them after delivery is accepted. Bidders who are not awarded a bid must remove their samples as soon as possible after award has been made on the item or items for which the samples had been submitted. The City will not be responsible for such samples if not removed by the bidder within thirty (30) days after the award has been made.

    Bidders shall make all arrangements for delivery of samples to place designated by the City as well as the removal of samples. Cost of delivery and removal of samples shall be borne by the bidder. All samples packages should be marked "Samples for Purchasing Bureau" and each sample should bear the name of the bidder, item number, bid number, and shall be carefully tagged or marked in a substantial manner. Failure of the bidder to clearly identify samples as indicated may be considered sufficient reason for rejection of bid, and in such cases the City will not be liable for the loss of samples.

SPECIFICATIONS

21. **Trade Names**: In cases where an item is identified by a manufacturer's name, trade name, catalog number or reference, it is understood that the bidder proposes to furnish the item so identified and does not propose to furnish an "equal" unless the proposed "equal" is definitely indicated therein by the bidder.

The reference to a name brand is intended to be descriptive but not restrictive and only to indicate to the prospective bidder articles that will be satisfactory. Bids on other makes and catalogs will be considered, provided each bidder clearly states on the face of his proposal exactly what he proposes to furnish, and forwards with his bid, a cut, illustration, or other descriptive matter which will clearly indicate the character of the article covered by the bid.

The Purchasing Agent hereby reserves the right to approve as an equal, or to reject as not being equal, any article the bidder proposes to furnish which contains major or minor variations from specification requirements but may comply substantially therewith.

If no particular brand, model, or make is specified, and if no data are required to be submitted with the bid, the successful contractor, after award and before manufacture or shipment, may be required to submit working drawings or detailed descriptive data sufficient to enable the Purchasing Agent to judge if each requirement of the specifications is being complied with.

22. **Formal Specifications**: The Bidder shall abide by and comply with the true intent of the specifications and not take advantage of any unintentional error or omission, but shall fully complete every part as the true intent and meaning of the specifications and drawings. Whenever herein mention is made of any article, material, or workmanship to be in accordance with laws, ordinances, building codes, underwriter's codes, A.S.T.M. standards, or similar expressions, the requirements of these laws, ordinances, etc. shall be construed as the minimum requirements of these specifications.

AWARD

23. **Award or Rejection of Bids**: The contract will be awarded to the lowest responsible and responsive bidder complying with the provisions of the Invitation, provided the bid price is reasonable and it is to the interest of the City to accept it. The Purchasing Agent reserves the right to reject any or all bids and to waive any informality in bids received whenever such rejection or waiver is in the interest of the City. The Purchasing Agent also reserves the right to reject the bid of a bidder who has previously failed to perform properly or complete on time contracts of a similar nature, or a bid of a bidder where investigation shows the bidder is not in a position to perform the contract.

In determining responsibility, the following other qualifications, in addition to price, will be considered by the Purchasing Agent:

a) The ability, capacity and skill of the bidder to perform the service required within the specified time.

b) The character, integrity, reputation, judgment, experience and efficiency of the bidder.

c) The quality of performance of previous contracts or services.

d) The previous and existing compliance by the bidder with laws and ordinances relating to previous contracts with the City and to the bidder's employment practices.

e) The sufficiency of the final resources and ability of the bidder to perform the contract or provide services.

f) The quality, availability and adaptability of the supplies or contractual services to the particular use required.

g) The ability of the bidder to provide future maintenance and service for the use of the subject of the contract.

h) Whether the bidder is in arrears to the City, in debt on contract, is a defaulter on surety to the City, or whether the bidder's taxes or assessments are delinquent.

I) Such other information as may be secured by the Purchasing Agent having a bearing on the decision to make the award.

In determining a bidder's responsiveness, the Purchasing Agent shall consider material deviations from the advertised specifications which materially affect price, quantity, quality or limit the bidder's liability.

24. **Notice of Acceptance**: A written award (or Acceptance of Bid) mailed (or otherwise furnished) to the successful Bidder within the time for acceptance specified in the Invitation to Bid shall be deemed to result in a binding contract without further action by either party.

25. **Tie Bids**: If two or more bidders submit identical bids and are equally qualified, the decision of the City to make award to one or more of such bidders shall be final. Selection may be made by drawing lots.

26. **Resident Bidders - Preference**: Price and other factors being equal, preference may be given first to resident bidders of the City, except when in the judgment of the City such purchases would operate to the disadvantage of the City, and selection by drawing lots shall not apply where the tie bids are between a resident and non-resident bidder.

27. **Specific Bid Quantities**: Where quantities are specifically stated, acceptance will bind the City to order quantities specified and to pay for at contract prices all such supplies or services delivered that meet specifications and conditions of the contract. However, the City will not be required to accept delivery of any unordered balances as of the contract expiration date unless the contractor furnishes the Purchasing Agent with a statement of unordered balances not later than ten (10) days after the termination date of the contract.

28. **Requirements Bid Quantities**: On "Requirements" bids, acceptance will bind the City to pay for, at unit bid prices, only quantities ordered and delivered.

29. **Availability of Funds**: The City shall be obligated to pay for goods and services received only to the extent that money has been appropriated and encumbered for such purpose. The contractor in turn shall be obligated to perform only so long as money is available to pay for the goods and services it supplies. If this contract extends through one fiscal year of the City into the next year, the City's obligations hereunder shall be specifically limited to and shall be conditioned upon the appropriations for such following year.

30. **Contract Alterations**: The contractual terms, conditions and provisions of this contract, including all general conditions and instructions to bidders, shall not be modified by the bidder. The Purchasing Agent shall have the right, at his option, to treat any bid submitted with additional or differing contract provisions as informal or to ignore such additional provisions and to award as if

such additional provisions had not been submitted by the bidder. This section shall not apply if the request for bids or the specifications specifically invite the bidder to submit additional or modifying provisions, but only to the extent that such additional or modifying provisions are requested by and are acceptable to the Purchasing Agent. Where the bidder submits a bid for goods or services which vary from the City's specifications, the decision of the Purchasing Agent of whether such goods or services are functionally equivalent to the goods or services requested by the City shall be final. Alterations or changes in the specifications of the goods or services furnished under this contract can only be made upon the written authorization signed by the Purchasing Agent, and any other alteration or modification that is not signed by the Purchasing Agent or his designated representative shall be void. Alterations in contract language shall further require the approval of the City Department of Law.

31. **Term of Contract**: This contract shall remain in force for the period specified unless extended by mutual consent of both parties or terminated as provided herein.

32. **Termination of Contracts**: Contracts shall remain in force for full periods specified and until all articles ordered before date of termination shall have been satisfactorily delivered and accepted and thereafter until all requirements and conditions shall have been met, unless:

a) terminated prior to expiration date by satisfactory deliveries of entire contract requirements.

b) extended upon written authorization of the Purchasing Agent and accepted by contractor, to permit ordering of unordered balances or additional quantities at contract prices and in accordance with contract terms.

33. **Subletting of Contract**: It is mutually understood and agreed that the Contractor shall not assign, transfer, convey, sublet or otherwise dispose of his contract or his right, title or interest therein, or his power to execute such contract, to any other person, firm or corporation without the previous written consent of the City Purchasing Agent, but in no case shall such consent relieve the Contractor from his obligations, or change the terms of the contract.

34. **Default**: The contract may be cancelled or annulled by the Purchasing Agent in whole or in part by written notice of default to the Contractor upon non-performance or violation of contract terms. An award may be made to next low bidder, or, articles specified may be purchased on the open market similar to those so terminated. In either event, the defaulting Contractor (or his surety) shall be liable to the City for costs to the City in excess of the defaulted contract prices. Provided, that the contractor shall continue the performance of this contract to the extent not terminated under the provisions of this clause. Failure of the contractor to deliver materials or services within the time stipulated on his bid, unless extended in writing by the Purchasing Agent, shall constitute contract default.

35. **Delivery Failures**: Failure of a Contractor to deliver within the time specified, or within reasonable time as interpreted by the Purchasing Agent, or failure to make replacements of rejected articles when so requested, immediately or as directed by the Purchasing Agent, shall constitute authority for the Purchasing Agent to purchase in the open market articles of comparable grade to replace the articles rejected or not delivered. On all such purchases, the Contractor shall reimburse the City within a reasonable time specified by the Purchasing Agent, for any expense incurred in excess of contract prices or the City shall have the right to deduct such amount from monies owed the defaulting Contractor. Such purchases shall be deducted from contract quantities. Should public necessity demand it, the City reserves the right to use or consume articles delivered which are substandard in quality, subject to an adjustment in price to be determined by the Purchasing Agent.

36. **Non-Liability**: The Contractor shall not be liable in damages for delay in shipment or failure to deliver when such delay or failure is the result of fire, flood, strike, act of God, act of government, act of an alien enemy or by any other circumstances which, in the Purchasing Agent's opinion, is beyond the control of the contractor. Under such circumstances, however, the Purchasing Agent may at his discretion, cancel the contract.

37. **New Goods, Fresh Stock**: All contracts, unless otherwise specifically stated, shall produce new commodities, fresh stock, latest model, design or pack.

38. **Equal Employment Opportunities**:

a) The City of Rochester, New York reaffirms its policy of Equal Opportunity in its commitment to require all contractors, lessors, vendors and suppliers doing business with the City to follow a policy of Equal Employment Opportunity, in accordance with the requirements set forth herein. This policy is adopted pursuant to the City's Affirmative Action Plan, Article XV, Contract Compliance. The City does not discriminate on the basis of handicap status as defined in 31 CFR Part 51, in admission, access to, or treatment or employment in its programs and activities. The City is including this policy statement in all bidding documents, contracts, and leases. Contractors, lessors, vendors and suppliers shall agree to comply with State and Federal Equal Opportunity laws and regulations and Federal regulations 31 CFR Part 51and shall submit documentation regarding Equal Employment Opportunity upon the City's request.

b) Definitions:

1. Good Faith Effort - shall mean every reasonable attempt to comply with the provisions of this policy by making every reasonable effort to achieve a level of employment of minority groups and female workers that is consistent with their presence in the local work force.

2. Minority Group Persons - shall mean a person of Black, Spanish surname American, Asian American or American Indian ethnic or racial origin and identity.

c) Compliance: The Contractor shall comply with all of the following provisions of the Equal Employment Opportunity Requirement:

1) The Contractor agrees that he will not discriminate against any employee for employment because of race, color, religion, sex, age, or of employees for performance of work under this Agreement or any subcontract hereunder, the Contractor and its subcontractors, if any, shall not, by reason of race, creed, color, sex, age or national origin, discriminate against any person who is qualified and available to perform the work to which the employment relates. The Contractor agrees to take affirmative action to ensure that applicants are employed, and that applicants are hired and that employees are treated during their employment, without regard to their race, color, religion, sex, age or national origin.

---

2) If the Contractor is found guilty of discrimination in employment on the grounds of race, color, sex, religion, age or national origin by any court or administrative agency that has jurisdiction pursuant to any State or Federal Equal Employment Opportunity Laws or regulations, such determination will be deemed to be a breach of contract, and this Agreement will be terminated in whole or part without any penalty or damages to the City on account of such cancellation or termination and the Contractor shall be disqualified from thereafter selling to, submitting bids to, or receiving awards of contract with the City of Rochester for goods, work, or services until such time as the Contractor can

demonstrate its compliance with this policy and all applicable Federal and State Equal Opportunity laws and regulations.

3.The Contractor shall cause the foregoing provisions to be inserted in all subcontracts, if any, for any work covered by this Agreement so that such provisions will be binding upon each subcontractor, provided that the foregoing provisions shall not apply to subcontracts for standard commercial supplies or raw materials.

39. **Purchase of Products from Companies Doing Business in Northern Ireland Supporting Fair Employment:**

1.The vendor understands that the City has adopted a policy prohibiting contracting for goods or services with a person, firm, or corporation doing business in Northern Ireland, who does not support fair employment without religious discrimination and does not cooperate with agencies monitoring equal opportunity employment.

2. If, because of applicable law, a contract is awarded to a contractor who does not support equal opportunity employment without religious discrimination, the contractor must submit a statement to the Director of Finance detailing the reasons for such nonsupport of fair employment.

40. **Guarantee**: Unless otherwise specified, the Contractor shall unconditionally guarantee the materials and workmanship of all equipment furnished by him for a period of one year from date of acceptance of the items delivered and installed, unless otherwise specified herein. If, within the guarantee period, any defects or signs of deterioration are noted, which, in the opinion of the City are due to faulty design and installation, workmanship, or materials, the Contractor, at his expense, shall repair or adjust the equipment or parts to correct the condition, or he shall replace the part or entire unit to the complete satisfaction of the City. These repairs, replacements or adjustments shall be made only at such time as will be designated by the City as least detrimental to the operation of City business.

41. **Placing of Orders**: Orders against contracts will be placed with the Contractor on either a Purchase Order or Blanket Purchase Order executed and released by the Purchasing Agent. Telephone orders placed directly with the contractor by the ordering Agency may be authorized by the Purchasing Agent only after execution of a Blanket Purchase Order.

42. **Provisions for Other Agencies:** Unless otherwise stipulated by the bidder, the bidder agrees when submitting his bid that he will make available to all City agencies and departments and the City School District the bid prices he submits in accordance with the bid terms and conditions, should any said department or agency wish to buy under this bid proposal.

DELIVERY PROVISIONS

43. **Responsibility for Materials Shipped and Risk of Loss**: The Contractor shall be responsible for the materials or supplies covered by this contract until they are delivered to the designated point and received, properly installed if necessary, and accepted by the City and the Contractor shall bear all risk on rejected materials or supplies. Rejected materials or supplies must be removed by and at the expense of the Contractor promptly after notification of rejection, unless public health and safety require immediate destruction or other disposal of rejected delivery. Upon failure to do so within ten (10) days after notification, the City may return the rejected materials or supplies to the contractor at his risk and expense, or dispose of them as its own property.

44. **Inspections**: Inspection and acceptance of materials or supplies will be made after delivery. Final inspection shall be conclusive except as regards latent defects, fraud, or such gross mistakes as amount to fraud. Final inspection and acceptance or rejection of the materials or supplies will be

made as promptly as practicable, but failure to inspect and accept or reject materials or supplies shall not impose liability on the City for such materials or supplies as are not in accordance with the specifications. All delivered materials shall be accepted subject to inspection and physical count.

45. **Time of delivery**: Deliveries will be accepted between 9:00 A.M. and 4:00 P.M. on weekdays only. No deliveries will be accepted on Saturdays, Sundays or Holidays.

46. **Packing Slips or Delivery Tickets**: All shipments or deliveries shall be accompanied by Packing Slips or Delivery Tickets and shall contain the following information for each item delivered:

    The Purchase Order Number

    The Name of the Article and Stock Number (Supplier's)

    The Quantity Ordered

    The Quantity Shipped

    The Quantity Back Ordered

    The Name of the Contractor

    Bidders are cautioned that failure to comply with these conditions SHALL BE CONSIDERED SUFFICIENT REASON FOR REFUSAL TO ACCEPT THE GOODS.

47. **FOB Destination Delivery**: Unless otherwise specifically stated in the City's request for bids, all goods, equipment and materials shall be delivered to the location designated by the City. The bidder shall include in his bid price all reasonable and necessary transportation, shipping, handling and delivery charges. Delivery shall not be complete until the goods, etc. are placed in the building, room, or other location specified by the City, either in the bid documents or in the Purchase Order.

48. **General Guaranty**: Contractor agrees to:

    a) save the City, its agents and employees harmless from liability of any nature or kind for the use of copyrighted or non-copyrighted composition, secret process, patented or non-patented invention, article or appliance furnished or used in the performance of the contract which the contractor is not the patentee, assignee, licensee or owner.

    b) protect the City against latent defective material or workmanship and to repair or replace any damages or marring occasioned in transit or delivery.

    c) furnish adequate protection against damage to all work and to repair damages of any kind, to the building or equipment, to his own work or to the work of other contractors for which he or his workmen are responsible.

    d) pay for all permits, licenses and fees and give all notices and comply with all laws, ordinances, rules and regulations of the City and the State of New York.

49. **Indemnity:** Contractor shall indemnify, keep and save harmless the City, its agents, officials and employees, against all injuries, death, loss, damages, claims, patent claims, suits, liabilities, judgments, costs and expenses, which may in anyway accrue against the City in consequence of the granting of this contract or which may in anyway result therefrom, whether or not it shall be

alleged or determined that the act was caused through negligence or omission of the Contractor or his employees, of the subcontractor or his employees, if any, and the Contractor shall, at his own expense, appear, defend and pay all charges of attorneys and all costs and other expenses arising therefrom or incurred in connection therewith, and if any judgment shall be rendered against the City in any such action, the Contractor shall at his own expense, satisfy and discharge the same. Contractor expressly understands and agrees that any performance bond or insurance protection required by this contract, or otherwise provided by Contractor, shall in no way limit the responsibility to indemnify, keep and save harmless and defend the City as herein provided.

50. **Collusive Bidding**: The Bidder certifies that his bid is made without any previous understanding, agreement or connection with any person, firm or corporation making a bid for the same project without prior knowledge of competitive prices, and is in all respects fair, without outside control, collusion, fraud or otherwise illegal action.

51. **Identical Bidding**: Executive Order No. 10946: All identical bids submitted to the City as a result of advertised procurement for materials, supplies, equipment or services exceeding $1,000.00 in total amount may at the discretion of the City, be reported to the Attorney General of the United States in accordance with Form DJ-1510 and the Presidential Order dated April 24, 1961 for possible violation and enforcement of antitrust laws.

52. **Employees Not To Benefit**: As a prerequisite for the payment pursuant to the terms of this contract, there shall be furnished to the City a statement under oath that no employee or officer of the City, or members of his or her immediate family, including spouse, parents, or children, or any person representing or purporting to represent any member or members of the elected governing body has received or has been promised directly or indirectly, any financial benefit, by way of fee, commission, finder's fee, political contribution, or any other similar form of remuneration and/or on account of the acts of awarding and/or executing the contract. Upon request by the City, as a prerequisite to payment pursuant to the terms of this contract, there will be furnished to the requester, under oath, answers to any interrogatories related to a possible conflict of interest as herein embodied. Any contract made or entered into where it is discovered that violation of the intent of this provision exists shall be declared null and void and all monies received by the Contractor shall be returned to the City.

    Any person executing a false statement or violating the provisions of this section shall be subject to possible prosecution.

53. **Child Labor**: Pursuant to Resolution No. 37-38 of the City of Rochester, the bidder certifies to the best of his/her knowledge that Child Labor has not been employed in the manufacture of the materials, supplies, the containers thereof, or services represented hereon.

54. **Prevailing Wages**: Bidder hereby certifies that to the extent applicable to this contract the wage rates to be paid to employees on this contract shall be in conformity with the wage rates established by the Comptroller pursuant to and in conformity with Section 220 of the New York State Labor Law. To the extent that prevailing wages are not applicable to the contract, the bidder hereby certifies that he/she shall pay employees working hereunder the minimum wages established by law.

55. **Testimony Concerning Contracts**: The refusal of the vendor, or any of its officers, directors, partners, members or agents, when called before a Grand Jury, to testify concerning any transaction or contract had with the State of New York, any political subdivision thereof, a public authority or with any public department, agency or official of the State of New York or of any political subdivision thereof or of a public authority, to sign a waiver of immunity against subsequent criminal prosecution or to answer any relevant questions concerning such transaction or contract, shall disqualify the vendor and such officer, director, member or agent thereof from thereafter selling to or submitting bids to or receiving awards from or entering into any contracts with any municipal corporation in the

State of New York or any public department, agency or official thereof, for goods, works or services, for a period of five (5) years after such refusal and any or all contracts made with any municipal corporation or a public department, agency or official thereof, by such person, and by any firm, partnership or corporation of which he is a member, partner, director or officer, may be cancelled or terminated by the municipal corporation without any liability on the part of the municipal corporation or any penalty or damages on account of such cancellation or termination.

56. **Status As Independent Contractor**: The Contractor, in accordance with his status as an independent contractor, covenants and agrees that he shall conduct himself in a manner consistent with such status, that he will neither hold himself nor his employees out as, nor claim to be an officer or employee of the City by reason hereof, and that he and his employees will not by reason hereof, make any claim, demand or application for any right or privilege applicable to an officer or employee of the City, including but not limited to Workers' Compensation coverage, unemployment insurance benefits, social security coverage, and retirement membership or credit.

57. **Audit**: The Contractor agrees to permit on-site inspection and auditing of all records, books, papers, and documents associated with this Agreement by authorized representatives of the City, and further agrees to provide necessary staff support for the performance of such audit. The Contractor agrees to maintain for a period of three (3) consecutive years following termination of this Agreement any and all records, reports and other documentation arising from the performance of this agreement; however, this period shall be extended beyond three years for any and all records and information pertaining to unresolved questions, which have been brought to the Contractor's attention by written notice by the City.

58. **Compliance With All Laws**: The Contractor agrees that, during the performance of the work required pursuant to this Agreement, the Contractor, and all employees working under his direction, shall strictly comply with all local, state or federal laws, ordinances, rules or regulations controlling or limiting in any way their actions during their said performance of the work required by this Agreement. Furthermore, each and every provision of law and contractual clause required by law to be inserted in this Agreement shall be deemed to be inserted herein. If, through mistake or otherwise, any such provision is not inserted or is not correctly inserted, then upon the application of either party this Agreement shall be forthwith physically amended to make such insertion or correction.

59. **Extent of Agreement**: This Agreement constitutes the entire and integrated Agreement between and among the parties hereto and supersedes any and all prior negotiations, agreements, and conditions, whether written or oral. Any modification or amendment to this Agreement shall be void unless it is in writing and subscribed by the party to be charged or by its authorized agent.

60. **Law and Forum**: This Agreement shall be governed by and under the laws of the State of New York and the Charter of the City of Rochester. The parties further agree that the Supreme Court of the State of New York, held in and for the County of Monroe shall be the forum to resolve disputes arising out of either this agreement or work performed according thereto. The parties waive all other venue or forum selections. The parties may agree between themselves on alternative forums.

61. **No Waiver**: In the event that the terms and conditions of this agreement are not strictly enforced by the City, such non-enforcement shall not act as or be deemed to act as a waiver or modification of this Agreement, nor shall such non-enforcement prevent the City from enforcing each and every term of this Agreement thereafter.

62. **Severability**: If any provision of this Agreement is held invalid by a court of law, the remainder of this Agreement shall not be affected thereby, if such remainder would then continue to conform to the laws of the State of New York.

NOTICE TO BIDDERS

Effective October 1, 1984, Section 38, Part a) of the General Conditions and Instructions to Bidders incorporated in this document has been amended to read:

38. Equal Opportunities:

a) The City of Rochester, New York reaffirms its policy of equal opportunity in its commitment to require all contractors, lessors, vendors, and suppliers doing business with the City to follow a policy of equal opportunity, in accordance with the requirements set forth herein. This policy is adopted pursuant to the City's Affirmative Action Plan, Article XV, Contract Compliance. The City does not discriminate on the basis of handicap status as defined in 31 CFR Part 51, in admission, access to, or treatment or employment in its programs or activities. The City is including these policy statements in all bidding documents, contracts, and leases. Contractors, lessors, vendors, and suppliers shall agree to comply with State and Federal equal opportunity laws and regulations and Federal regulation 31 CFR Part 51 and shall submit documentation regarding equal opportunity upon the City's request.

Effective June 15, 1989, the General Condition and Instructions to Bidders incorporated in this document has been amended by the insertion of the following new section:

38(A). Purchase of Products from Companies Doing Business in Northern Ireland Supporting Fair Employment

1) The vendor understands that the City has adopted a policy prohibiting contracting for goods or services with a person, firm, or corporation doing business in Northern Ireland, who does not support fair employment without religious discrimination and does not cooperate with agencies monitoring equal opportunity employment.

2) If, because of applicable law, a contract is awarded to a contractor who does not support equal opportunity employment without religious discrimination, the contractor must submit a statement to the Director of Finance detailing the reason for such nonsupport of fair employment.

2.2 REFERENCES

2.2.1 ANSI/ASTM A185 - Welded Steel Wire Fabric for Concrete Reinforcement.

2.2.2 ANSI/ASTM C143 - Test for Slump of Portland Cement.

2.2.3 ANSI/ASTM C150 - Portland Cement.

2.2.4 ANSI/ASTM C260 - Air-Entraining Admixtures for Concrete.

2.2.5 ASTM A615 - Deformed and Plain Billet-Steel Bars for Concrete Reinforcement.

2.2.6 ASTM C33 - Concrete Aggregates.

2.2.7 PCI Manual for Structural Design of Architectural Precast Concrete.

2.2.8 PCI MNL-117 - Manual for Quality Control for Plants and Production of Architectural Precast Concrete Products.

2.3 SUBMITTALS

2.3.1 Submit shop drawings indicating details of fabrication, installation, embedded items, and anchors.

2.3.2 Submit manufacturer's surface cleaning instructions.

2.3.3 Submit two (2) samples 6 x 6 inches in size illustrating surface finish and texture.

2.4 STORAGE AND HANDLING

2.4.1 Handle precast members to position, consistent with their shape and design. Lift and support only from support points. Planters should be on individual pallets, secured and wrapped.

2.4.2 Protect edges of members to prevent staining, chipping, or spalling of concrete.

2.5 MATERIALS

2.5.1 Cement: ANSI/ASTM C150, Portland Type 1 - normal, gray color.

2.5.2 Concrete Materials: ASTM C33, ANSI/ASTM C330, water and sand.

2.5.3 Reinforcing Steel: ASTM A615, deformed steel bars; ANSI-ASTM A185, welded steel wire fabric; galvanized finish; strength and size commensurate with precast unit design.

2.5.4 Air Entrainment Admixture: ANSI/ASTM C260.

2.5.5 Surface Finish Aggregate: As ordered by City Project Manager based upon finish samples supplied by manufacturer.

2.5.6 Shims: Matertial shall be capable of withstanding moisture and the weight of planter, when planted, without decay or deformation.

2.5.7 Concrete Mix: Minimum 5000 psi 28-day strength, air entrained, in accordance with ANSI/ACI 301.

2.6 FABRICATION

2.6.1 Use rigid molds, constructed to maintain precast unit uniform in shape, size and finish.

2.6.2 Maintain consistent quality during manufacture.

2.6.3 Embed reinforcing steel, anchors, inserts, plates, angles, and other cast-in items as indicated on shop drawings.

2.6.4 Cure units to develop concrete quality and to minimize appearance blemishes such as non-uniformity, staining, or surface cracking.

2.6.5 Minor patching in plant acceptable, providing structural adequacy and appearance of units is not impaired.

2.7 FINISH

2.7.1 Ensure exposed-to-view finish surfaces of precast units are uniform in color and appearance.

2.7.2 Sandblast exposed-to-view precast unit surfaces to heavy exposure. Protect adjacent surfaces.

3. <u>QUANTITY</u>

3.1 There is no guarantee the City will purchase the quantities listed in the proposal sheet, however, the quantities are the estimated quantity desired based on budget considerations.

3.1.1 Payment will be made for actual purchases only.

4. LENGTH OF CONTRACT

4.1 Will be one time purchase.

4.2 Each successful bidder is required to hold prices firm for a period of ninety (90) days after award in case the City decides to purchase additional units.

5. QUALIFICATION OF BIDDER

5.1 Bids will be accepted only from established manufacturers or their authorized dealers. In the event a bid is submitted by a dealer, the dealer hereby guarantees that he is an authorized dealer of the manufacturer and that the manufacturer has agreed to supply the dealer with all quantities of items to be ordered by the dealer pursuant to any resulting purchases by the City and agrees further to provide the City with a certificate from the manufacturer acknowledging same, if requested.

5.2 Bids will be entertained from others only if manufacturers or dealers do not bid, in which case bidders must demonstrate financial and organizational resources to be able to fill resulting orders.

5.3 Bidders are required to submit the following with their bid:

5.3.1 Two (2) copies of proposal pages.

5.3.2 Manufacturers specifications and technical data including the following information:

5.3.2.1 Detailed specifications of construction fabrication

5.3.2.2 Manufacturer=s installation instructions

5.3.2.3 Maintenance literature

5.3.2.4 Product warranty

5.3.3 Shop drawings indicating pertinent dimensions, general construction, component connections, anchoring methods, leveling methods, and hardware and installation procedures.

5.3.4 Two samples 2" x 2" x actual wall thickness in size, minimum.

5.3.4.1 Sample shall represents the actual finish, texture, colors, materials, and construction of the finished planter style submitted for proposal.

5.3.4.2 At its discretion, the City shall submit the samples to an independent testing laboratory to determine air entrainment and compressive strength properties. Any samples failing to meet the above specifications will not be considered for award. All testing shall be completed prior to contract award.

5.3.5 Shim material specifications and sample.

5.3.6 Samples of available finish textures and colors.

6. METHOD OF AWARD

6.1 Award will be made to responsive and responsible bidder based upon the Total Bid Price.

6.2 The City reserves the right to reject any bid where the quality and design of the proposed planter does not meet the specifications.

6.3 The City of Rochester reserves the right to make multiple awards if the lowest bidder cannot deliver the quantity of planters ordered by the City in the specified time period.

6.4 The decision of the purchasing agent will be final in award evaluation.

7. DELIVERY

7.1 F.O.B. designated sites within the City of Rochester.

7.2 All materials purchased must be delivered, placed and leveled on site no later than ninety (90) calendar days after receipt of order.

7.3 Shipment of materials will be authorized by valid City of Rochester purchase order only.

7.4 No change may be made to this specification except by written addendum.

---

8. METHOD OF MEASUREMENT AND BASIS OF PAYMENT

8.1 The unit price shall include manufacture, delivery and unloading of all materials as required to complete the order requested

Description	Pay Unit
Planter A - 5' x 1.5'	EA
Planter B - 5' x 2.0'	EA
Planter C - 4' x 1.5'	EA

9. REJECTION OF BIDS

9.1 The City of Rochester reserves the right to reject any and all bids or proposals if the best interest of the City of Rochester will be served by such action.

9. 2 The Purchasing Agent reserves the right to reject any bid that is unrealistic or where a disproportionate unit cost is proposed.

9.3 The Purchasing Agent reserves the right to reject any bidder who proposes an unacceptable product or cannot prove to the satisfaction of the City its ability to execute the terms and conditions of this contract.

PRECAST ROCHESTER STYLE CONCRETE PLANTERS

The undersigned bidder hereby agrees to furnish the goods or services specified, and to otherwise fully meet all terms, conditions, and specifications contained in this Invitation to Bid without exception unless exceptions are clearly noted in the proposal. Signature must be that of the bidder or of an employee or agent authorized to sign on behalf of the bidder.

UNIT DESCRIPTION	PRICE		QUANTITY	TOTAL
Planter A - 5' x 1.5'	$_____	x	12	$_____
Planter B - 5' x 2.0'	$_____	x	13	$_____
Planter C - 4' x 1.5'	$_____	x	9	$_____

TOTAL BID PRICE $_____

GUARANTEED DELIVERY: _____ CALENDAR DAYS AFTER RECEIPT OF ORDER

_____ _____

Authorized Signature Typed Name & Title of Authorized Signer

_____

Typed Name of Company Delivery:

(Continued through page 10)

PRECAST ROCHESTER STYLE CONCRETE PLANTERS

PROPOSAL

PRINT OR TYPE THE FOLLOWING INFORMATION:

_____
Name of Firm or Corporation

_____
Street Address

_____
City State Zip Code

_____ _____
Telephone / Fax No. Federal Employer Identification No.

_____
E-mail Address of Recipient of Contract Awards and Extensions

_____
Date

****

ACCEPTED ON BEHALF OF THE CITY OF ROCHESTER FOR:

_____

Contract No. _____ Contract Term:_____

_____
Purchasing Agent

Date: _____

ATTACHMENT "A"

DRAWINGS

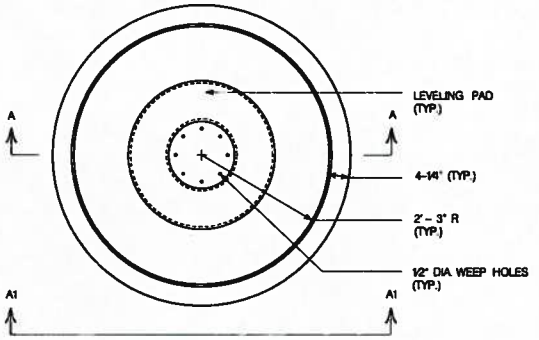

PLAN A

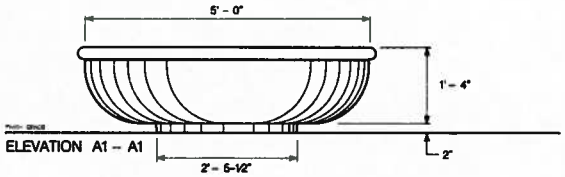

ELEVATION A1 - A1

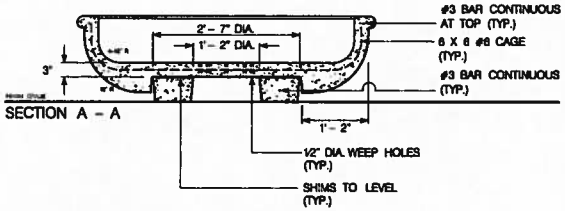

SECTION A - A

PRECAST CONCRETE PLANTER A - 5' X 1.5'

1" = 1' - 0"

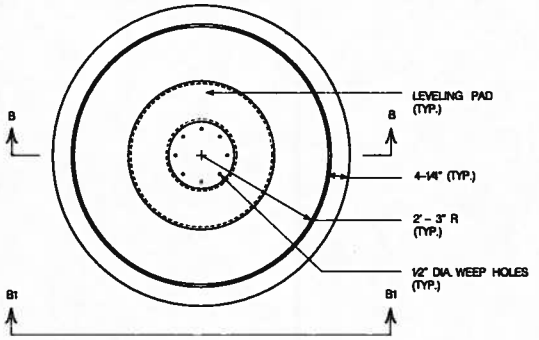

PLAN B

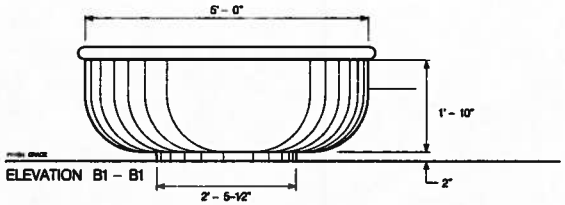

ELEVATION B1 - B1

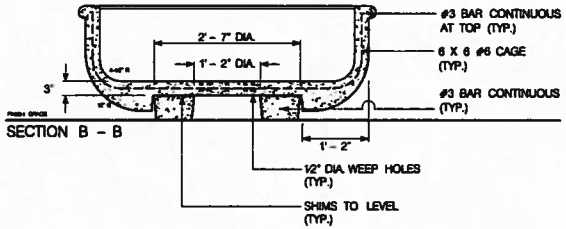

SECTION B - B

PRECAST CONCRETE PLANTER B - 5' X 2.0'

1" = 1' - 0"

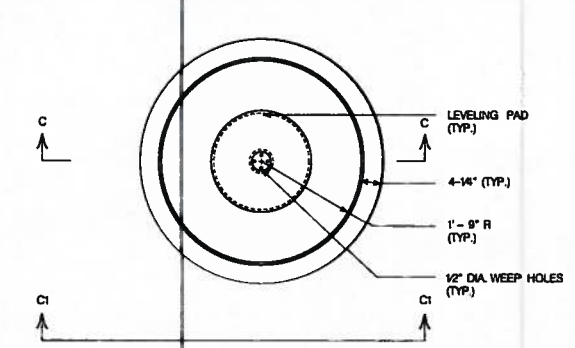

PLAN C

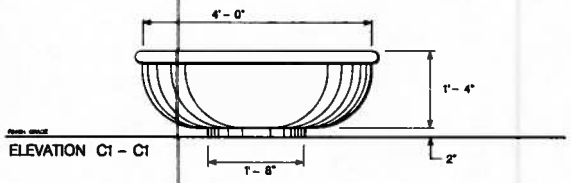

ELEVATION C1 - C1

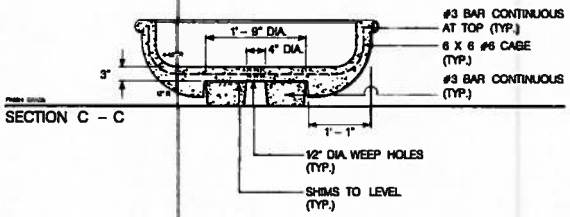

SECTION C - C

PRECAST CONCRETE PLANTER C - 4' X 1.5'

1" = 1' - 0"

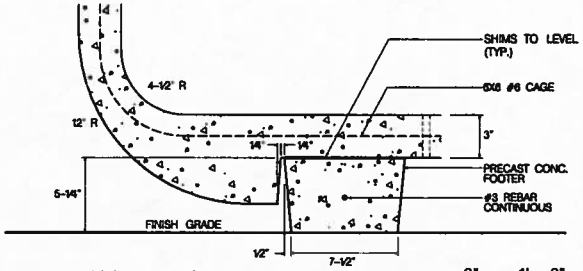

PLANTER FOOT - TYPICAL

3" = 1' - 0"

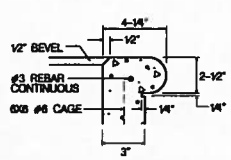

PLANTER RAIL - TYPICAL

3" = 1' - 0"

PRECAST CONCRETE NOTES:

1. SHOP DRAWINGS TO BE SUBMITTED PRIOR TO FABRICATION FOR APPROVAL. ITEMS TO BE INCLUDED ARE: ALL DIMENSIONS, REINFORCING, AND SURFACE FINISHES.
2. PRECAST CONCRETE FINISH TO BE GREY TINTED CONCRETE WITH FINE GRANITE AGGREGATE. SURFACE SHALL BE SAND-BLASTED TO EXPOSE GRANITE AGGREGATE. SUBMIT SAMPLES FOR APPROVAL.
3. FINAL HEIGHTS WHEN INSTALLED MAY VARY DEPENDING UPON THE SHIMS REQUIRED TO LEVEL EACH INDIVIDUAL PLANTER.

TOWED	JUNE 1999				
CHECKED					
DRAWN	J.J.M.				
DESIGN					
PROJECT NO.	99062	NO.	REVISIONS	BY	DATE

Department of Environmental Services
Architecture & Engineering Services
City of Rochester, New York

SENIOR LANDSCAPE ARCHITECT: JOHN BECK, R.L.A.
CITY ENGINEER: James R. McIntosh, P.E.

PROJECT / DRAWING TITLE
MAIN STREET
PLANTER REPLACEMENTS
-
PLANTER DETAILS

DRAWING NO. 1 / 1

ATTACHMENT "B"

PHOTOS