City of Rochester

Department of Environmental Services
City Hall Room 300B, 30 Church Street
Rochester, New York 14614-1290
www.cityofrochester.gov

Bureau of Architecture
and Engineering

June 24, 2014

ADDENDUM NUMBER 1

Invitation to Bid # C03900
Thurston Road Revitalization Project
Project Number 14106

Instruction to Bidders:

1. In the Contract Proposal Book **MODIFY** as set forth in the attached, Page ADD1-2 of 12.

2. SIGN this Addendum below acknowledging receipt and understanding, **INSERT** this page only (ADD 1-1 of 12) in the bidding document, and **RETURN** it with your Bid.

Bid opening shall remain Tuesday, July 1, 2014, at 2:00 PM.

CITY OF ROCHESTER

James R. McIntosh, P.E.
City Engineer

CITY OF ROCHESTER

Charles Zettek, Jr
Purchasing Agent

The undersigned bidder acknowledges receipt and understanding of Addendum No. 1

_____, 2014
Authorized Signature

_____
Name of Company

MODIFICATIONS TO THE CONTRACT DOCUMENTS AND/OR DRAWINGS

1. In the Contract Proposal Book, **REMOVE** pages P4.2 of P4.12, P4.3 of P4.12 and P4.11 of P4.12 and **REPLACE** them with the new pages P4.2A1, P4.3A1, and P4.11A1 (ADD1-3 of 12, ADD1-4 of 12, and ADD1-5 of 12) issued with this Addendum.

2. In the Contract Proposal Book, **REMOVE** pages SS-3 through SS-8 and **REPLACE** it with the new page SS-3A1 (ADD1-6 of 12) issued with this Addendum.

3. In the Contract Drawings, **REMOVE** Drawing No. 4 and **REPLACE** it with the new Drawing 4A1 (ADD1-7 of 12) issued with this Addendum.

4. In the Contract Drawings, **REMOVE** Drawing No. 19 and **REPLACE** it with the new Drawing 19A1 (ADD1-8 of 12) issued with this Addendum.

5. In the Contract Drawings, **REMOVE** Drawing No. 20 and **REPLACE** it with the new Drawing 20A1 (ADD1-9 of 12) issued with this Addendum.

6. In the Contract Drawings, **REMOVE** Drawing No. 37 and Drawing No. 38 and **REPLACE** them with the new Drawing 37A1 and Drawing No. 38A1 (ADD1-10 of 12 and ADD1-11 of 12) issued with this Addendum.

7. In the Contract Drawings, **REMOVE** Drawing No. 47 and **REPLACE** it with the new Drawing 47A1 (ADD1-12 of 12) issued with this Addendum.

THE UNDERSIGNED PROPOSES TO COMPLETE: THURSTON ROAD REVITALIZATION PROJECT
PROJECT # 14106 IN ACCORDANCE WITH THE CITY OF ROCHESTER'S STANDARD CONTRACT DOCUMENTS AND THE ATTACHED CONSTRUCTION CONTRACT
ATTACHED CONSTRUCTION CONTRACT DOCUMENTS AT THE FOLLOWING PRICES:

LETTER / ITEM #	DESCRIPTION	EST. QUANT.	UNIT	UNIT BID PRICE (FIGURES)	UNIT PRICE (WRITTEN - PRINTED LEGIBLY)	ESTIMATED QUANTITY X UNIT PRICE
407.0102	DILUTED TACK COAT	60	GAL	$ _____	_____ DOLLARS and _____ CENTS	$ _____
552.17	SHIELDS AND SHORING	2,240	SF	$ _____	_____ DOLLARS and _____ CENTS	$ _____
555.05	CONCRETE FOR STRUCTURES, CLASS F	25	CY	$ _____	_____ DOLLARS and _____ CENTS	$ _____
S601.2308	8" INSERTA TEE CONNECTION TO EXISTING SEWER	16	EA	$ _____	_____ DOLLARS and _____ CENTS	$ _____
603.98100804	POLYVINYL CHLORIDE (PVC) SEWER PIPE AND FITTINGS , 8"	325	LF	$ _____	_____ DOLLARS and _____ CENTS	$ _____
603.98101204	POLYVINYL CHLORIDE (PVC) SEWER PIPE AND FITTINGS , 12"	10	LF	$ _____	_____ DOLLARS and _____ CENTS	$ _____
603.99050002	CONCRETE PLUGS FOR SEWER PIPE	14	EA	$ _____	_____ DOLLARS and _____ CENTS	$ _____
604.070402	ALTERING DRAINAGE STRUCTURES, LEACHING BASINS AND MANHOLES (TYPE A)	4	EA	$ _____	_____ DOLLARS and _____ CENTS	$ _____

THE UNDERSIGNED PROPOSES TO COMPLETE: THURSTON ROAD REVITALIZATION PROJECT
PROJECT # 14106 IN ACCORDANCE WITH THE CITY OF ROCHESTER'S STANDARD CONTRACT DOCUMENTS AND THE ATTACHED CONSTRUCTION CONTRACT
ATTACHED CONSTRUCTION CONTRACT DOCUMENTS AT THE FOLLOWING PRICES:

LETTER / ITEM #	DESCRIPTION	EST. QUANT.	UNIT	UNIT BID PRICE (FIGURES)	UNIT PRICE (WRITTEN - PRINTED LEGIBLY)	ESTIMATED QUANTITY X UNIT PRICE
604.070403	ALTERING DRAINAGE STRUCTURES, LEACHING BASINS AND MANHOLES (TYPE B)	2	EA	$ _____	_____ DOLLARS and _____ CENTS	$ _____
604.500401	SPECIAL DRAINAGE STRUCTURE	70	LF	$ _____	_____ DOLLARS and _____ CENTS	$ _____
605.0901	UNDERDRAIN FILTER, TYPE 1	10	CY	$ _____	_____ DOLLARS and _____ CENTS	$ _____
605.1502	PERFORATED CORRUGATED POLYETHYLENE UNDERDRAIN TUBING, 6" DIAMETER	90	LF	$ _____	_____ DOLLARS and _____ CENTS	$ _____
R608.12	CONCRETE SIDEWALKS AND DRIVEWAYS	545	CY	$ _____	_____ DOLLARS and _____ CENTS	$ _____
608.01140002	EXPOSED AGGREGATE CONCRETE SURFACING FOR SIDEWALKS	1,715	SY	$ _____	_____ DOLLARS and _____ CENTS	$ _____
608.020102	HOT MIX ASPHALT (HMA) SIDEWALKS, DRIVEWAYS, BICYCLE PATHS AND VEGETATION CONTROL STRIPS	25.0	TON	$ _____	_____ DOLLARS and _____ CENTS	$ _____
608.21	EMBEDDED DETECTABLE WARNING UNITS	40	SY	$ _____	_____ DOLLARS and _____ CENTS	$ _____

THE UNDERSIGNED PROPOSES TO COMPLETE: THURSTON ROAD REVITALIZATION PROJECT
PROJECT # 14106 IN ACCORDANCE WITH THE CITY OF ROCHESTER'S STANDARD CONTRACT DOCUMENTS AND THE ATTACHED CONSTRUCTION CONTRACT ATTACHED CONSTRUCTION CONTRACT DOCUMENTS AT THE FOLLOWING PRICES:

LETTER / ITEM #	DESCRIPTION	EST. QUANT.	UNIT	UNIT BID PRICE (FIGURES)	UNIT PRICE (WRITTEN - PRINTED LEGIBLY)	ESTIMATED QUANTITY X UNIT PRICE
690.01000105	SPECIALTY WORK (GENERAL) - KIOSK	1	LS	$ _____	_____ DOLLARS and _____ CENTS	$ _____
690.01000205	SPECIALTY WORK (GENERAL) - GATEWAY FEATURES	1	LS	$ _____	_____ DOLLARS and _____ CENTS	$ _____
698.04	ASPHALT PRICE ADJUSTMENT	100	DC	$ 1.00	FIXED PRICE SEE SPECIAL NOTES	$ 100
698 05	FUEL PRICE ADJUSTMENT	100	DC	$ 1 00	FIXED PRICE SEE SPECIAL NOTES	$ 100
S999 0201	PROJECT SIGN - 6' X 4'	2	EA	$ _____	_____ DOLLARS and _____ CENTS	$ _____
697 03	FIELD CHANGE PAYMENT	60,000	DC	$ 1.00	FIXED PRICE SEE SPECIAL NOTES	$ 60,000
SUBTOTAL	_____ DOLLARS and _____ CENTS					$ _____

ITEM 603.98100204 - Polyvinyl Chloride (PVC) Sewer Pipe & Fittings 2 NPS
ITEM 603.98100304 - Polyvinyl Chloride (PVC) Sewer Pipe & Fittings 3 NPS
ITEM 603.98100404 - Polyvinyl Chloride (PVC) Sewer Pipe & Fittings 4 NPS
ITEM 603.98100604 - Polyvinyl Chloride (PVC) Sewer Pipe & Fittings 6 NPS
ITEM 603.98100804 - Polyvinyl Chloride (PVC) Sewer Pipe & Fittings 8 NPS
ITEM 603.98101004 - Polyvinyl Chloride (PVC) Sewer Pipe & Fittings 10 NPS
ITEM 603.98101204 - Polyvinyl Chloride (PVC) Sewer Pipe & Fittings 12 NPS
ITEM 603.98101504 - Polyvinyl Chloride (PVC) Sewer Pipe & Fittings 15 NPS
ITEM 603.98101804 - Polyvinyl Chloride (PVC) Sewer Pipe & Fittings 18 NPS
ITEM 603.98102104 - Polyvinyl Chloride (PVC) Sewer Pipe & Fittings 21 NPS
ITEM 603.98102404 - Polyvinyl Chloride (PVC) Sewer Pipe & Fittings 24 NPS
ITEM 603.98102704 - Polyvinyl Chloride (PVC) Sewer Pipe & Fittings 27 NPS
ITEM 603.98103004 - Polyvinyl Chloride (PVC) Sewer Pipe & Fittings 30 NPS
ITEM 603.98103304 - Polyvinyl Chloride (PVC) Sewer Pipe & Fittings 33 NPS
ITEM 603.98103604 - Polyvinyl Chloride (PVC) Sewer Pipe & Fittings 36 NPS

DESCRIPTION

Under this item the Contractor shall furnish, install and test (PVC) Sewer Pipe and fittings of the size and at the locations shown on the plans or where directed by the Engineer.

MATERIALS

As specified in the contract documents.

CONSTRUCTION DETAILS

As specified in the contract documents.

METHOD OF MEASUREMENT

The quantity will be measured as the number of linear feet of new sewer pipe (including all necessary connections and fittings) furnished and installed in accordance with the plans, specifications and as directed by the Engineer.

BASIS OF PAYMENT

The unit prices bid per linear foot shall include the cost of furnishing all labor, materials, and equipment necessary to satisfactorily complete the work including, but not limited to fittings, plugs, connections, and leakage tests.

Excavation, sheeting, and backfill material will be paid for separately under their respective items.

Progress payments will be made at the unit price bid for 80 percent of the quantity of pipe installed. The remaining 20 percent will be paid for when the testing of the system has been completed.

ESTIMATE OF QUANTITES

ITEM	DESCRIPTION	UNITS	QUANTITY	FINAL
203.02	UNCLASSIFIED EXCAVATION & DISPOSAL	CY	1980	
203.03	EMBANKMENT IN PLACE	CY	70	
203.07	SELECT GRANULAR FILL	CY	155	
206.0201	TRENCH AND CULVERT EXCAVATION	CY	390	
R206.06	CONDUIT EXCAVATION AND BACKFILL	LF	900	
304.12	SUBBASE COURSE, TYPE II	CY	605	
402.098202	9.5 F2 TOP COURSE HMA, 80 SERIES COMPACTION	TON	40	
402.198902	19 F9 BINDER COURSE HMA, 80 SERIES COMPACTION	TON	70	
407.0102	DILUTED TACK COAT	GAL	60	
552.17	SHIELDS AND SHORING	SF	2240	
555.05	CONCRETE FOR STRUCTURES, CLASS F	CY	25	
S601.2308	8" INSERTA TEE CONNECTION TO EXISTING SEWER	EA	16	
603.98100804	POLYVINYL CHLORIDE (PVC) SEWER PIPE AND FITTINGS , 8"	LF	325	
603.98101204	POLYVINYL CHLORIDE (PVC) SEWER PIPE AND FITTINGS , 12"	LF	10	
603.99050002	CONCRETE PLUGS FOR SEWER PIPE	EA	14	
604.070402	ALTERING DRAINAGE STRUCTURES, LEACHING BASINS AND MANHOLES (TYPE A)	EA	4	
604.070403	ALTERING DRAINAGE STRUCTURES, LEACHING BASINS AND MANHOLES (TYPE B)	EA	2	
604.500401	SPECIAL DRAINAGE STRUCTURE	LF	70	
605.0901	UNDERDRAIN FILTER, TYPE 1	CY	10	
605.1502	PERFORATED CORRUGATED POLYETHYLENE UNDERDRAIN TUBING, 6" DIAMETER	LF	90	
R608.12	CONCRETE SIDEWALKS AND DRIVEWAYS	CY	545	
608.01140002	EXPOSED AGGREGATE CONCRETE SURFACING FOR SIDEWALKS	SY	1715	
608.020102	HOT MIX ASPHALT (HMA) SIDEWALKS, DRIVEWAYS, BICYCLE PATHS AND VEGETATION CONTROL STRIPS	TON	25	
608.21	EMBEDDED DETECTABLE WARNING UNITS	SY	40	
609.0202	STONE CURB, GRANITE, TYPE B	LF	2100	
610.1403	TOPSOIL - LAWNS	CY	85	
610.14000011	STRUCTURAL SOIL MIX	CY	110	
610.1602	TURF ESTABLISHMENT - LAWNS	SY	760	
611.0161	PLANTING - MAJOR DECIDUOUS TREES - 2 1/2 INCH CALIPER BALL & BURLAP, FIELD POTTED OR FIELD BOXED	EA	47	
614.060104	TREE REMOVAL OVER 4 INCHES TO 6 INCHES DIAMETER BREAST HEIGHT - STUMPS GRUBBED	EA	4	
614.060204	TREE REMOVAL OVER 6 INCHES TO 12 INCHES DIAMETER BREAST HEIGHT - STUMPS GRUBBED	EA	4	
614.060304	TREE REMOVAL OVER 12 INCHES TO 18 INCHES DIAMETER BREAST HEIGHT - STUMPS GRUBBED	EA	1	
614.060404	TREE REMOVAL OVER 18 INCHES TO 24 INCHES DIAMETER BREAST HEIGHT - STUMPS GRUBBED	EA	1	
615.08010005	BENCH, TYPE 01	EA	10	
615.08020005	BENCH, TYPE 02	EA	10	
615.27020010	BICYCLE RACK (BICYCLE RACK 02 BICYCLE)	EA	21	
S617.01	FENCING FOR TREE PROTECTION	LF	2460	
619.01	WORK ZONE TRAFFIC CONTROL	LS	1	
619.04	TYPE III CONSTRUCTION BARRICADE	EA	10	
619.1611	MAINTAIN TRAFFIC SIGNAL EQUIPMENT (REQUIREMENT A)	MO	12	
623.12	CRUSHED STONE (IN-PLACE MEASURE)	CY	40	
625.01	SURVEY OPERATIONS	LS	1	
625.070300M0	VERTICAL ADJUSTMENT OF EXISTING SURVEY MONUMENT	EA	3	
625.070600M0	RESET EXISTING MONUMENT FRAME AND COVER	EA	13	
627.50140008	CUTTING PAVEMENT	LF	3670	
635.0103	CLEANING AND PREPARATION OF PAVEMENT SURFACES - LINES	LF	2340	
637.11	ENGINEER'S FIELD OFFICE - TYPE 1	MO	6	
645.0500000M0	SIGN SLEEVE	EA	30	
647.23	RELOCATE OVERHEAD SIGN PANEL, SIGN PANEL ASSEMBLY	EA	14	
655.25010005	FURNISH AND/OR INSTALL INLET ASSEMBLY, AS SPECIFIED	EA	4	
655.25020005	FURNISH AND/OR INSTALL INLET ASSEMBLY, AS SPECIFIED	EA	19	
663.33	ADJUSTING VALVE BOX ELEVATION	EA	7	
663.35	ADJUSTING CURB BOX ELEVATION	EA	47	
670.0105	FOUNDATION FOR LIGHT STANDARDS, 5 FEET LONG	EA	22	
670.2603	RIGID PLASTIC CONDUIT, 3"	LF	1320	
S671.1601	INSTALL FIBERGLASS HANDHOLE/PULLBOX (FURNISHED)	EA	17	
680.01960010	PAINT GALVANIZED EXISTING MAST ARM	EA	8	
680.01970210	PAINT GALVANIZED TRAFFIC SIGNAL POLE (ALL SIZES)	EA	8	
680.51000010	ALTER ELEVATION OF PULLBOXES	EA	37	

ESTIMATE OF QUANTITES

ITEM	DESCRIPTION	UNITS	QUANTITY	FINAL
680.53	CONDUIT JACKING OR BORING	LF	410	
680.53010010	CLEAN EXISTING CONDUIT	LF	1000	
680.54	INDUCTANCE LOOP INSTALLATION AND SEALING	LF	405	
680.71	SHIELDED LEAD-IN CABLE	LF	1025	
680.72	INDUCTANCE LOOP WIRE	LF	1325	
680.77000105	MODIFY TRAFFIC SIGNAL INSTALLATION - LOCATION 1	EA	1	
680.77000205	MODIFY TRAFFIC SIGNAL INSTALLATION - LOCATION 2	EA	1	
680.79000105	REMOVE TRAFFIC SIGNAL INSTALLATION - LOCATION 1	EA	1	
680.79000205	REMOVE TRAFFIC SIGNAL INSTALLATION - LOCATION 2	EA	1	
680.810121M0	LED TRAFFIC SIGNAL MODULES, 12" RED BALL	EA	16	
680.810123M0	LED TRAFFIC SIGNAL MODULES, 12" YELLOW BALL	EA	16	
680.810125M0	LED TRAFFIC SIGNAL MODULES, 12" GREEN BALL	EA	16	
680.810308	INSTALL BALL/ARROW LED TRAFFIC SIGNAL MODULE	EA	48	
680.810601	TRAFFIC SIGNAL SECTION - POLYCARBONATE, TYPE I, 12 IN.	EA	48	
680.8111	TRAFFIC SIGNAL BRACKET ASSEMBLY - 1 WAY	EA	16	
680.8205	OVERHEAD SIGN ASSEMBLY - TYPE E	EA	14	
680.8225	PEDESTRIAN PUSH BUTTON AND SIGN - WITHOUT POST	EA	6	
680.995600M0	ROD AND CLEAN CONDUIT	LF	810	
685.11	WHITE EPOXY REFLECTORIZED PAVEMENT STRIPES - 20 MILS	LF	2630	
685.12	YELLOW EPOXY REFLECTORIZED PAVEMENT STRIPES - 20 MILS	LF	35	
688.01	WHITE PREFORMED REFLECTORIZED PAVEMENT STRIPES	LF	900	
690.01000105	SPECIALTY WORK (GENERAL) - KIOSK	LS	1	
690.01000205	SPECIALTY WORK (GENERAL) - GATEWAY FEATURES	LS	1	
698.04	ASPHALT PRICE ADJUSTMENT	DC	100	
698.05	FUEL PRICE ADJUSTMENT	DC	100	
S999.0201	PROJECT SIGN - 6' X 4'	EA	2	
697.03	FIELD CHANGE PAYMENT	DC	60000	
699.040001	MOBILIZATION (4% MAX)	LS	1	

ESTIMATE OF QUANTITES (BY OTHERS)

ITEM	DESCRIPTION	UNITS	QUANTITY	FINAL
645.5101	GROUND-MOUNTED SIGN PANELS WITHOUT Z-BARS	SF	41	
645.5202	GROUND-MOUNTED SIGN PANELS LESS THAN OR EQUAL TO 30 SF WITH Z-BARS, HIGH-VISIBILITY SHEETING	SF	52	
645.81	TYPE A SIGN POSTS	EA	51	
645.85	POLE-MOUNTED SIGN SUPPORT SYSTEM (BAND MOUNTING)	EA	57	
647.31	RELOCATE SIGN PANEL, SIGN PANEL ASSEMBLY SIZE I (UNDER 30 SQUARE FEET)	EA	58	
647.51	REMOVE AND DISPOSE SIGNS PANEL, SIGN PANEL ASSEMBLIES - SIZE I (UNDER 30 SQUARE FEET)	EA	14	
647.61	REMOVE AND DISPOSE SIGNS, GROUND MOUNTED TYPE A SIGN SUPPORTS & FOUNDATIONS - SIZE I (UNDER 30 SF)	EA	11	
670.10010004	DECORATIVE LIGHT POLES WITH ONE LUMINAIRE	EA	22	
670.15100008	FURNISH AND INSTALL DECORATIVE STREET LIGHT POLE AND LUMINAIRE ASSEMBLIES	EA	21	
670.501215	LUMINAIRE, HIGH PRESSURE SODIUM VAPOR, STANDARD MOUNT, MEDIUM, SEMI-CUTOFF, 150 WATTS	EA	6	
670.7004	SINGLE CONDUCTOR CABLE, NUMBER 6 GAGE	LF	7420	
670.7006	SINGLE CONDUCTOR CABLE, NUMBER 10 GAGE	LF	3390	
670.81	REMOVE AND DISPOSE OF LAMPPOST ASSEMBLY	EA	21	

ERDMAN ANTHONY

PROJECT MANAGER: P. PRESUTTI
DESIGN ENG.: S. BEAMAN / D. BELLS

Department of Environmental Services
Architecture and Engineering Service
City of Rochester, New York

MANAGING ENGINEER: ALBERT J. GIGLIO, P.E.
CITY ENGINEER: JAMES MCMAHON, P.E.

PROJECT TITLE
THURSTON ROAD
REVITALIZATION
PROJECT

NO.	REVISION	BY	DATE

ISSUED: MAY, 2014
CHECKED: PJP
DRAWN: SAB / DAB
DESIGN: BRH
SCALE: AS NOTED
I.D. PROJECT: 19425.00

DRAWING TITLE
ESTIMATE OF QUANTITIES

DRAWING NO.
4A1
72

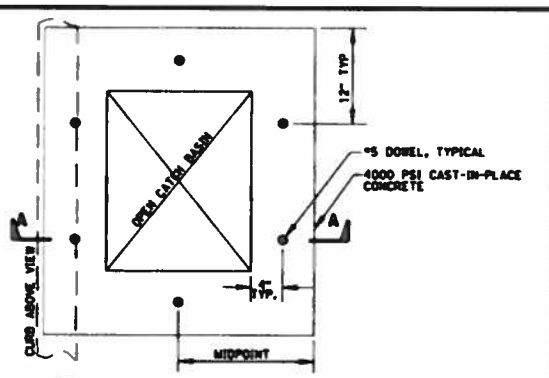

PLAN VIEW BELOW GRATE

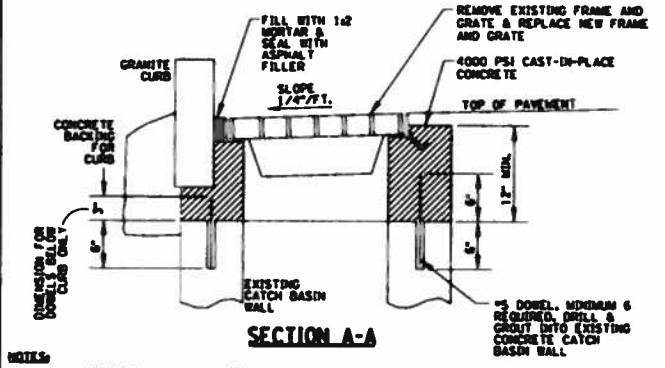

SECTION A-A

NOTES:

1. SCARIFY AND/OR REMOVE TOP OF EXISTING CATCH BASIN WALLS TO SUFFICIENT DEPTH TO ACCOMMODATE NEW CONCRETE CAP. COAT TOP SURFACE WITH EPOXY POLYSULFIDE GROUT PER NYSDOT SUB-SECTION 721-03 PRIOR TO POURING NEW CAP.
2. COAT INTERIOR OF NEW CONCRETE CONSTRUCTION WITH 2 COATS OF DURALKOTE 500 EPOXY OR APPROVED EQUAL.
3. COAT EXPOSED EXTERIOR OF NEW CONCRETE CONSTRUCTION WITH 2 COATS OF BITUMINOUS COATING.

Typical Detail for City Of Rochester Street Improvement Projects. Other than Emergency Approval.
Former City of Rochester Std. Dwg. No. 8004-7

MONROE COUNTY PURE WATERS

MARCH 2007	CATCH BASIN FRAME AND COVER ADJUSTMENT	FIGURE 6.10

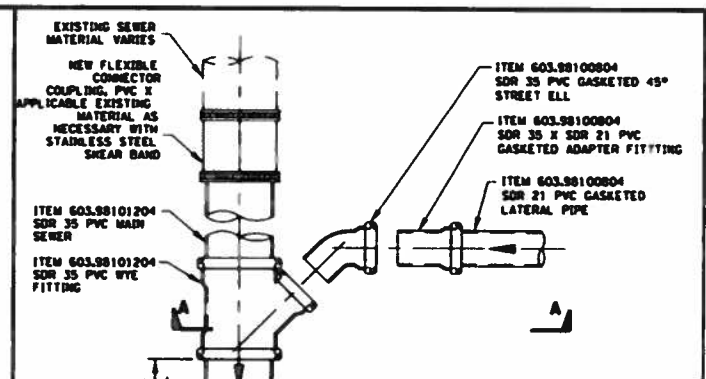

PLAN

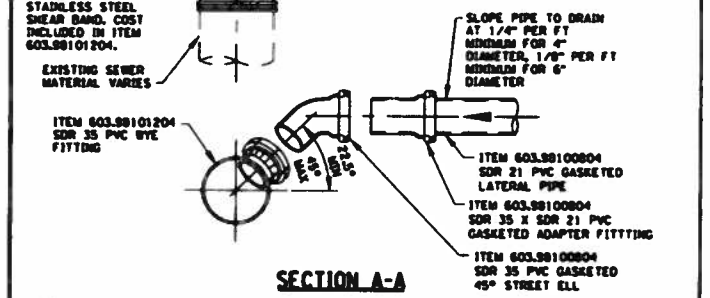

SECTION A-A

NOTES:

1. MAIN SEWER PIPE, LATERAL PIPE, WYE AND OTHER FITTINGS SHALL BE GASKETED TYPE FITTINGS. SOLVENT WELD JOINTS ARE NOT ALLOWED, EXCEPT AT CLEANOUTS.
2. SEE FIGURE 1.01 FOR PIPE BEDDING AND BACKFILL.
3. THIS DETAIL DOES NOT APPLY TO EXISTING PVC SEWERS.

MONROE COUNTY PURE WATERS

Feb 2005	NEW LATERAL WYE CONNECTION TO EXISTING NON-PVC SEWER	FIGURE 3.05

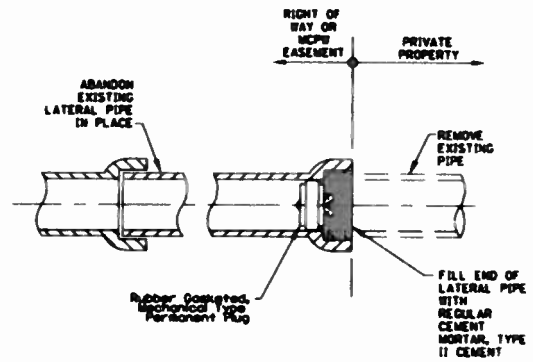

LATERAL ABANDONMENT FOR PIPE DIAMETER OF 6" OR LESS

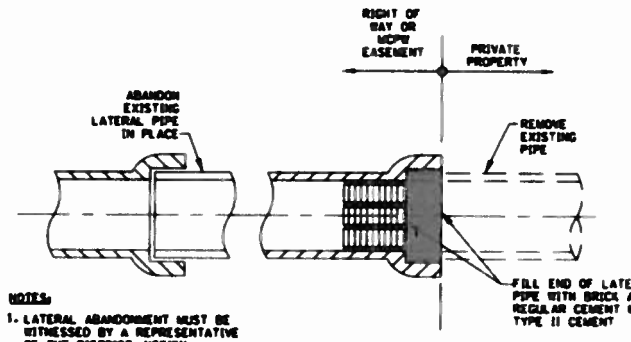

LATERAL ABANDONMENT FOR PIPE DIAMETER GREATER THAN 6"

NOTES:

1. LATERAL ABANDONMENT MUST BE WITNESSED BY A REPRESENTATIVE OF THE DISTRICT. NOTIFY PURE WATERS A MINIMUM OF 48 HOURS IN ADVANCE OF CONSTRUCTION FOR INSPECTION OF THE LATERAL ABANDONMENT. TELEPHONE (585) 760-7600, OPTION 5.
2. BRICK FOR PLUG ASTM C-32, GRADE SS.

MONROE COUNTY PURE WATERS

Feb 2005	LATERAL ABANDONMENT DETAIL	FIGURE 5.01

CATCH BASIN FRAME AND COVER ADJUSTMENT

1. TYPE A FRAME & GRATE TO BE INSTALLED AS PART OF ITEM 604.070402 AND TYPE B FRAME & GRATE TO BE INSTALLED AS PART OF ITEM 604.070403.
2. THE COST FOR C.I.P. CONCRETE, DRILLING AND GROUTING OF DOWELS, DOWELS, MORTAR & ASPHALT FILLER SHALL BE INCLUDED IN ITEM 604.070402 OR ITEM 604.070403.

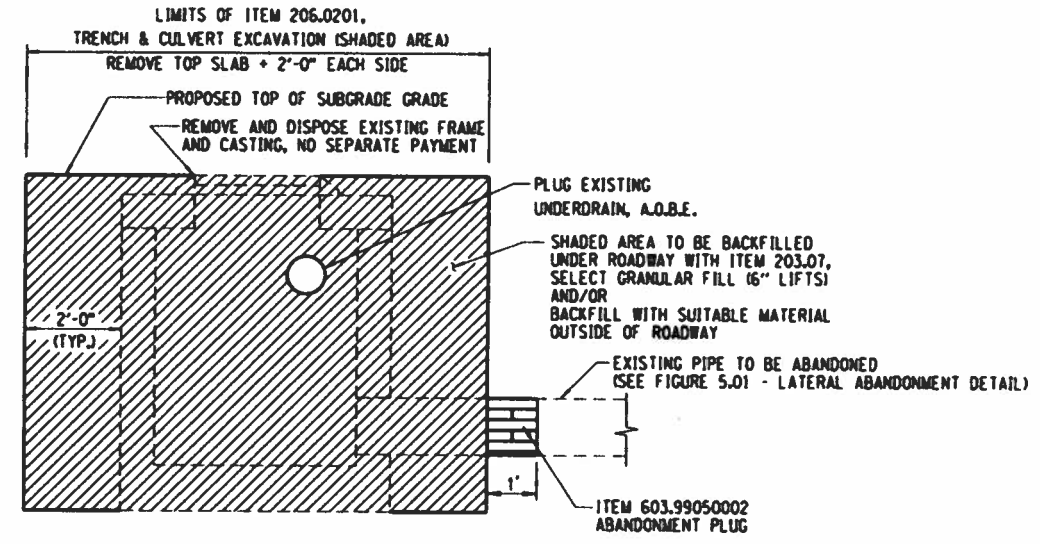

REMOVE EXISTING DRAINAGE STRUCTURE IN PLACE-PLUG

NOT TO SCALE

NOTES:

1. SEAL WITH CLASS A CONCRETE (2 KSI) OR PLUG WITH BRICKS AND NON-SHRINK GROUT.

ERDMAN ANTHONY

PROJECT MANAGER: P. PRESUTTI
DRAWN BY: S. BEAMAN / D. WELLS

Department of Environmental Services
Architecture and Engineering Services
City of Rochester, New York

MANAGING ENGINEER: ALBERT J. SIRIANNI, P.E.
CITY ENGINEER: JAMES RADOMISLI, P.E.

PROJECT TITLE: THURSTON ROAD REVITALIZATION PROJECT

NO.	REVISION	BY	DATE

ISSUED: MAY, 2014
CHECKED: PJP
DRAWN: SAB / DAW
DESIGN: BRH
SCALE: AS NOTED
EA PROJECT NUMBER: 19425.00

DRAWING TITLE: MISCELLANEOUS DETAILS DRAINAGE

DRAWING NO.: 19A1 / 72

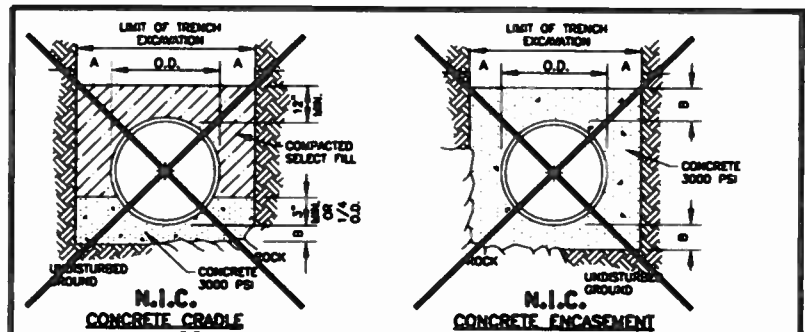

PIPE DIA.	DIM. A	DIM. B
UP TO 18"	1.0'	6"
21" TO 36"	1.5'	9"
OVER 36"	1.5'	12"

NOTES:

1. TRENCH BACKFILL SHALL BE AS REQUIRED BY THE HIGHWAY OWNER.
2. SELECT FILL SHALL BE SAND, GRAVEL, AND SIMILAR MATERIAL WHICH SHALL BE FREE FROM CLAY, LOAM, ORGANIC MATERIAL, DEBRIS, FROZEN MATERIAL AND SHALL CONTAIN ONLY SMALL AMOUNTS OF STONE, PEBBLES, OR LUMPS OVER ONE INCH IN GREATEST DIMENSION, BUT NONE OVER TWO INCHES IN GREATEST DIMENSION.
3. STONE BEDDING SHALL MEAN APPROVED IMPORTED AGGREGATE MEETING THE REQUIREMENTS OF THE NEW YORK STATE DEPARTMENT OF TRANSPORTATION, STANDARD SPECIFICATION, "CRUSHED STONE", PRIMARY SIZE 1 OR A MIXTURE OF PRIMARY SIZE 1 AND 2, WASHED.
4. COARSE AGGREGATE SHALL MEAN APPROVED IMPORTED AGGREGATE MEETING THE REQUIREMENTS OF THE NEW YORK STATE DEPARTMENT OF TRANSPORTATION, STANDARD SPECIFICATION, "CRUSHED STONE", PRIMARY SIZE 3 OR A MIXTURE OF PRIMARY SIZE 3 AND 4.
5. THIS FIGURE 1.01 APPLIES TO PURE WATERS SANITARY, STORM, AND COMBINED MANHOLE SEWERS AND LATERAL PIPE INSTALLATIONS, AS WELL AS FORCEMAINS.

MONROE COUNTY PURE WATERS		
Feb 2005	BEDDING DETAILS	FIGURE 1.01

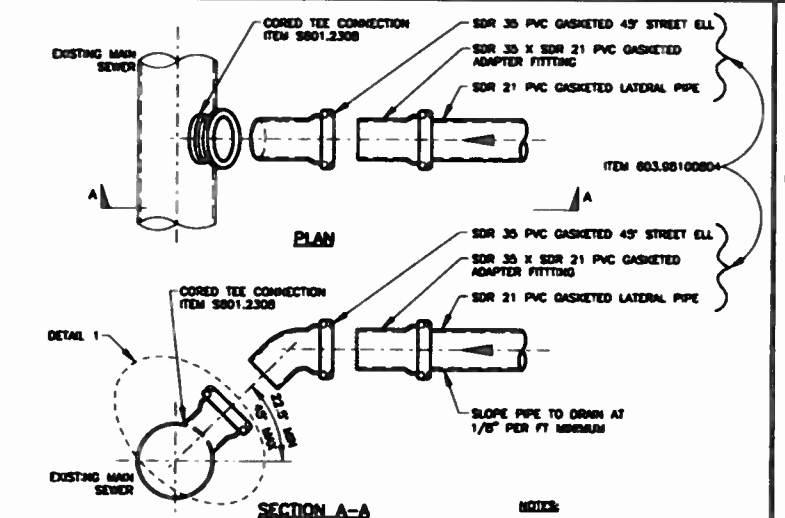

INSERTA TEE SIZE	HOLE DIAMETER
4" (100mm)	4-1/2" (112.5mm)
6" (150mm)	6-1/2" (162.5mm)
8" (200mm)	8-3/4" (218.8mm)
10" (250mm)	10-7/8" (271.9mm)
12" (300mm)	12-7/8" (321.9mm)
15" (375mm)	15-13/16" (395.3mm)

REQUIRED METHOD OF CUTTING HOLE IS WITH HOLE SAW FOR PVC AND POLYETHYLENE, AND DIAMOND BIT FOR CONCRETES, CLAY, AND DUCTILE IRON.

NOTES:

1. LATERAL CONNECTION MUST BE CORED. PNEUMATIC DEVICES OR HAMMERING KNOCK-OUT METHODS ARE NOT ACCEPTABLE FOR CREATING OPENING FOR NEW LATERAL PIPE.
2. SIZE OF CORED OPENING SHALL BE LIMITED TO ONE-HALF THE NOMINAL DIAMETER OF THE MAINLINE SEWER.
3. EXPOSE FACE OF PIPE FROM CROWN TO INVERT FOR 12" ALONG THE LENGTH OF THE MAIN. CORE HOLE A MINIMUM OF 6" AWAY FROM EXISTING PIPE HUBS.
4. TAKE NECESSARY PRECAUTIONS TO PREVENT DAMAGE TO THE EXISTING SEWER, AND TO PREVENT DEBRIS FROM ENTERING THE SEWER.
5. THOROUGHLY CLEAN SURFACE OF EXISTING PIPE OF FOREIGN MATTER AND LOOSE PARTICLES PRIOR TO PLACEMENT OF TEE CONNECTION.
6. TEE CONNECTION: INSERTA TEE BY INSERTA FITTINGS CO., OR APPROVED EQUAL.
7. LATERAL CONNECTIONS MUST BE WITNESSED BY A REPRESENTATIVE OF THE DISTRICT. NOTIFY PURE WATERS A MINIMUM OF 48 HOURS IN ADVANCE OF CONSTRUCTION FOR INSPECTION OF THE LATERAL CONNECTION. TELEPHONE (585) 760-7600, OPTION 5.

MONROE COUNTY PURE WATERS		
Feb 2005	INSERT TYPE CORED TEE CONNECTION TO EXISTING SEWER	FIGURE 3.02

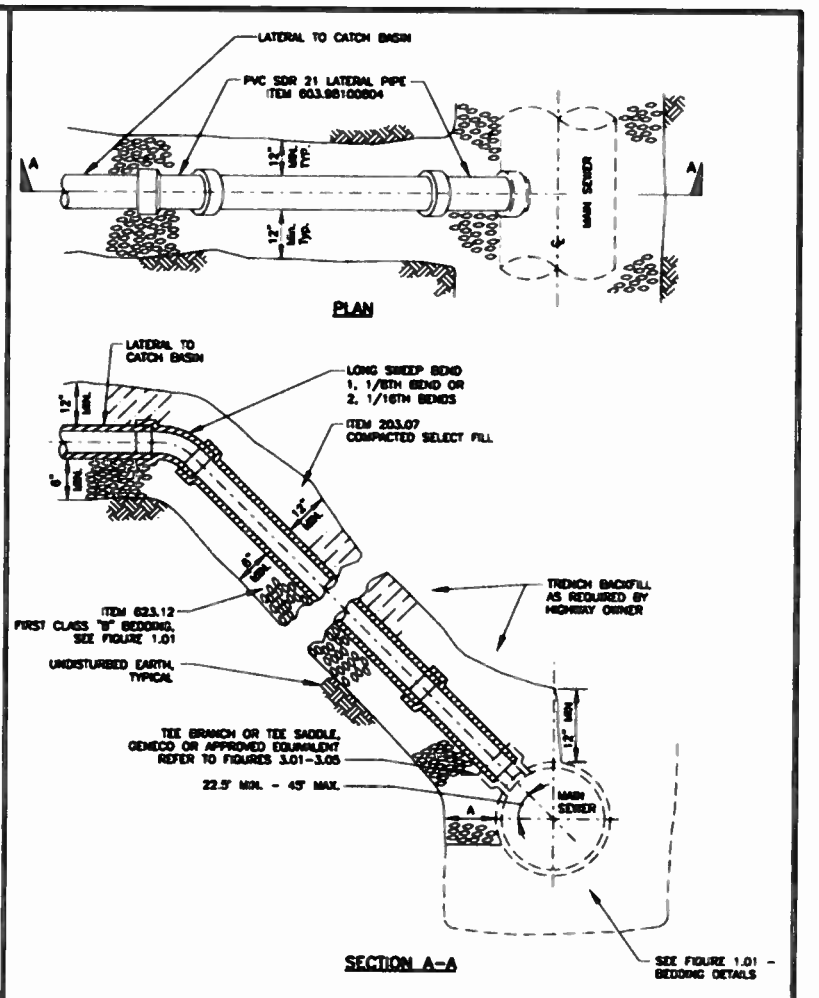

MONROE COUNTY PURE WATERS		
Feb 2005	LATERAL RISER CONNECTION	FIGURE 3.08

ROCHESTER PURE WATER DISTRICT (RPWD) NOTES:

1. CONTRACTOR IS TO CONSTRUCT ALL SEWER APPURTENANCES (MAIN SEWER, LATERALS, CATCH BASINS AND MANHOLES) IN CONFORMANCE WITH THE SPECIFICATIONS OF THE ROCHESTER PURE WATERS DISTRICT.
2. CONTRACTOR IS TO TAKE APPROPRIATE MEASURES TO PREVENT DIRT, DEBRIS AND CONSTRUCTION MATERIALS FROM ENTERING SEWER APPURTENANCES (SEWER MAIN, LATERAL, CATCH BASINS AND MANHOLES) DURING CONSTRUCTION OF PROJECT.
3. RPWD WILL LOCATE AND MARK EXISTING LATERALS AT THE REQUEST OF THE CONTRACTOR. THE RPWD IS ONLY ABLE TO MARK THE WYE LOCATION AT THE MAIN SEWER, AND CANNOT VERIFY THE LOCATION OF THE LATERAL BACK TO THE R.O.W. CONTRACTOR MAY REQUEST A LATERAL STAKEOUT BY CONTACTING MCPW MAPS AND RECORDS ROOM AT 1-585-753-7367.
4. RPWD IS TO BE NOTIFIED IMMEDIATELY IN THE EVENT OF ANY DAMAGE TO SEWER APPURTENANCES BY CALLING 1-585-753-7351. ALL REPAIRS ARE TO BE PERFORMED IN THE PRESENCE OF A REPRESENTATIVE OF RPWD, AND ARE TO BE MADE AS PER RPWD SPECIFICATIONS.
5. IN THE EVENT THAT EXISTING SEWER MAINS OR LATERAL PIPES ARE BROKEN DURING EXCAVATION, ANY AND ALL REPAIRS MUST BE EXTENDED LINEARLY. INTRODUCING NEW BENDS IN PIPE WILL NOT BE PERMITTED. ALL 5 INCH INSIDE DIAMETER LATERAL PIPE MUST BE REPAIRED USING 5 INCH SERVICE WEIGHT CAST IRON PIPE AND TWO FERNCOS. CONTRACTOR MAY BE PERMITTED TO USE OAKUM AND EPOXY MORTAR TO CONNECT NEW PVC PIPE TO AN EXISTING BELL THAT IS IN GOOD CONDITION.
6. STONE BEDDING MATERIAL USED FOR SEWER MAIN AND LATERAL PIPE REPAIRS IS TO BE CLASS B CONSISTING OF #1 AND #2 WASHED STONE AT A MINIMUM OF 6 INCH DEPTH.
7. CONTRACTOR WILL REPLACE ALL EXISTING SEWER MANHOLE FRAMES AND COVERS (AS PER CONTRACT) WITH NEW 7" FRAMES AND COVERS. CONTRACTOR WILL BE RESPONSIBLE FOR THE PURCHASING AND DELIVERY OF THE FRAMES AND COVERS. FRAMES AND COVERS WILL MEET RPWD SPECIFICATIONS (A.S.T.M. A48 (LATEST REVISION) CLASS 30B). CONTRACTOR IS TO ADD/REMOVE ADDITIONAL COURSES OF BRICK/BLOCK AS/IF REQUIRED TO RETROFIT NEW FRAMES ONTO EXISTING MANHOLE STRUCTURES AT THE REQUIRED FINISHED GRADE.
8. WHERE AN EXISTING CATCH BASIN IS TO BE REMOVED, ALL PORTIONS OF THE CATCH BASIN WALLS AND FOUNDATION ARE TO BE REMOVED AND THE EXISTING LATERAL ABANDONED AS PER RPWD SPECIFICATIONS.
9. ALL REMOVED SEWER MANHOLE FRAMES AND COVERS AND CATCH BASIN GRATES, ACCESS COVERS, AND CAPSTONES ARE THE PROPERTY OF THE ROCHESTER PURE WATERS DISTRICT. RETURN ITEMS TO THE MCPW FLEET CENTER, 145 PAUL ROAD, ROCHESTER, NEW YORK, MONDAY THROUGH FRIDAY BETWEEN 8:00 A.M. AND 3:00 PM AT NO COST TO THE OWNER.
10. CONTRACTOR IS TO NOTIFY MCPW BY CALLING (585)753-7600, OPTION 5, MINIMUM OF 48 HOURS IN ADVANCE WHEN PLANNING ON WORKING ADJACENT TO EXISTING MC FIBER OPTIC FACILITIES

ERDMAN ANTHONY

PROJECT MANAGER: P. PRESUTTI
DRAWN BY: S. BEAMAN / D. BELLS

Department of Environmental Services
Architecture and Engineering Services
City of Rochester, New York

MANAGING ENGINEER: ALBERT J. GIGLIO, P.E.
CITY ENGINEER: JAMES RACANTOSH, P.E.

PROJECT TITLE: THURSTON ROAD REVITALIZATION PROJECT

NO.	REVISION	BY	DATE

ISSUED: MAY, 2014
CHECKED: PJP
DRAWN: SAB / DAB
DESIGN: BRH
SCALE: AS NOTED
E.A. PROJECT NUMBER: 19425.00

DRAWING TITLE: MISCELLANEOUS DETAILS
DRAINAGE

DRAWING NO.: 20A1 / 72

CONCRETE SIDEWALK TABLE

ITEM R608.12 - CONCRETE SIDEWALKS AND DRIVEWAYS

BEGIN STATION	SIDE	END STATION	SIDE	AREA (SF)	DEPTH (FT)	ITEM R608.12 (CY)	COMMENTS
B 10+42.8	LT	T 134+96.1	RT	376.1	0.42	5.8	
T 134+52.6	RT	T 134+60.2	RT	60.0	0.58	1.3	CURB RAMP PORTION
T 134+74.7	LT	T 135+11.6	LT	243.9	0.42	3.8	UNDER EXP. AGG. SURFACING
T 135+21.2	LT	T 135+27.3	LT	30.0	0.58	0.6	DRIVEWAY
T 135+27.3	LT	T 135+31.2	LT	20.0	0.42	0.3	
T 135+27.6	LT	T 135+39.6	LT	88.8	0.42	1.4	UNDER EXP. AGG. SURFACING
T 135+55.0	LT	T 135+80.3	LT	187.7	0.42	2.9	UNDER EXP. AGG. SURFACING
T 135+97.2	LT	T 136+13.5	LT	123.4	0.42	1.9	UNDER EXP. AGG. SURFACING
T 136+21.5	LT	T 136+27.0	LT	44.5	0.42	0.7	UNDER EXP. AGG. SURFACING
T 136+35.1	RT	T 136+40.1	RT	30.5	0.42	0.5	
T 136+45.9	LT	T 136+63.0	LT	126.2	0.42	2.0	UNDER EXP. AGG. SURFACING
T 136+71.0	LT	T 136+86.9	LT	123.2	0.42	1.9	UNDER EXP. AGG. SURFACING
T 136+86.9	LT	E 9+67.8	RT	75.3	0.58	1.6	CURB RAMP PORTION
T 136+84.7	LT	E 9+61.7	RT	67.1	0.42	1.0	
T 136+98.6	RT	T 137+06.6	RT	48.0	0.42	0.7	UNDER EXP. AGG. SURFACING
T 137+91.0	RT	T 138+02.0	RT	56.1	0.42	0.9	
T 138+10.9	LT	T 138+13.6	LT	13.6	0.42	0.2	
T 138+13.6	LT	T 138+27.1	LT	161.8	0.58	3.5	DRIVEWAY
T 138+27.1	LT	T 138+35.9	LT	48.9	0.42	0.8	
S 10+35.4	LT	T 138+66.3	RT	56.5	0.42	0.9	
S 10+32.2	LT	T 138+63.6	RT	72.6	0.58	1.6	CURB RAMP PORTION
T 138+53.4	LT	T 138+70.9	LT	100.0	0.58	2.2	DRIVEWAY
T 138+98.3	LT	T 139+13.7	LT	101.1	0.58	2.2	DRIVEWAY
T 139+13.7	LT	M 9+60.0	RT	269.1	0.42	4.2	
T 139+59.3	LT	M 9+62.0	RT	95.1	0.58	2.1	CURB RAMP PORTION
M 9+60.1	LT	T 140+18.2	LT	180.7	0.42	2.8	
M 9+62.0	LT	T 139+95.7	LT	95.1	0.58	2.1	CURB RAMP PORTION
T 139+95.7	LT	T 140+62.8	LT	534.1	0.42	8.3	UNDER EXP. AGG. SURFACING
T 139+97.3	RT	D 10+40.0	RT	492.4	0.42	7.6	
T 140+52.5	LT	T 140+62.5	LT	57.4	0.42	0.9	
T 140+63.0	RT	T 140+85.0	RT	222.2	0.42	3.5	UNDER EXP. AGG. SURFACING
T 140+64.0	LT	T 140+81.3	LT	104.9	0.42	1.6	UNDER EXP. AGG. SURFACING
T 140+85.0	RT	D 10+38.1	RT	95.1	0.58	2.1	CURB RAMP PORTION
T 140+86.7	LT	T 140+96.7	LT	63.0	0.42	1.0	
T 140+89.3	LT	T 141+13.1	LT	143.9	0.42	2.2	UNDER EXP. AGG. SURFACING
D 10+40.0	LT	T 141+98.7	RT	445.2	0.42	6.9	
D 10+38.0	LT	T 141+21.6	RT	95.1	0.58	2.1	CURB RAMP PORTION
T 141+21.1	LT	T 141+35.6	LT	88.8	0.42	1.4	UNDER EXP. AGG. SURFACING
T 141+33.1	LT	T 141+38.1	LT	29.4	0.42	0.5	
T 141+43.6	LT	T 141+67.7	LT	133.9	0.42	2.1	UNDER EXP. AGG. SURFACING
T 141+61.7	LT	T 141+96.4	LT	178.2	0.58	3.9	DRIVEWAY
T 141+91.6	LT	T 142+25.2	LT	276.9	0.42	4.3	UNDER EXP. AGG. SURFACING
T 141+98.7	RT	T 142+08.0	RT	46.6	0.58	1.0	DRIVEWAY
T 142+07.6	LT	R 9+52.0	RT	212.5	0.42	3.3	
T 142+25.2	LT	R 9+62.4	RT	92.9	0.58	2.0	CURB RAMP PORTION
T 142+53.8	RT	T 142+59.8	RT	30.1	0.58	0.7	DRIVEWAY
R 9+60.0	LT	T 142+75.6	LT	114.9	0.42	1.8	
R 9+62.0	LT	T 142+61.8	LT	95.1	0.58	2.1	CURB RAMP PORTION
T 142+61.8	LT	T 143+06.0	LT	466.2	0.42	7.3	UNDER EXP. AGG. SURFACING
T 142+59.8	RT	EL 10+40.0	RT	449.9	0.42	6.9	

CONCRETE SIDEWALK TABLE (CONT'D)

ITEM R608.12 - CONCRETE SIDEWALKS AND DRIVEWAYS

BEGIN STATION	SIDE	END STATION	SIDE	AREA (SF)	DEPTH (FT)	ITEM R608.12 (CY)	COMMENTS
T 143+14.0	LT	T 143+43.3	LT	229.2	0.42	3.6	UNDER EXP. AGG. SURFACING
T 143+34.9	RT	EL 10+38.0	RT	95.1	0.58	2.1	CURB RAMP PORTION
T 143+54.8	LT	T 143+58.5	LT	18.8	0.42	0.3	UNDER EXP. AGG. SURFACING
EL 10+40.0	LT	T 144+12.7	RT	257.6	0.42	4.0	
EL 10+38.2	LT	T 143+72.6	RT	98.2	0.58	2.1	CURB RAMP PORTION
T 143+66.5	LT	T 143+98.9	LT	254.6	0.42	4.0	UNDER EXP. AGG. SURFACING
T 144+06.8	LT	T 144+31.6	LT	198.4	0.42	3.1	UNDER EXP. AGG. SURFACING
T 144+37.0	RT	T 144+47.2	RT	83.4	0.42	1.3	UNDER EXP. AGG. SURFACING
T 144+38.4	LT	T 144+91.5	LT	578.4	0.42	9.0	UNDER EXP. AGG. SURFACING
T 144+50.8	LT	MV 9+60.0	LT	247.8	0.42	3.8	
T 144+55.2	RT	T 144+69.5	RT	106.1	0.42	1.7	UNDER EXP. AGG. SURFACING
T 144+87.1	RT	T 144+95.3	RT	55.9	0.42	0.9	UNDER EXP. AGG. SURFACING
T 144+89.7	RT	T 145+13.9	RT	123.0	0.42	1.9	
T 144+91.5	LT	MV 9+62.0	LT	95.1	0.58	2.1	CURB RAMP PORTION
T 145+03.5	RT	T 145+13.9	RT	76.4	0.42	1.2	UNDER EXP. AGG. SURFACING
T 145+13.9	RT	T 145+40.7	RT	159.2	0.58	3.4	DRIVEWAY
MV 9+60.0	LT	T 145+58.9	LT	199.6	0.42	3.1	
MV 9+62.0	LT	T 145+27.9	LT	95.1	0.58	2.1	CURB RAMP PORTION
T 145+27.9	LT	T 145+63.9	LT	359.2	0.42	5.6	UNDER EXP. AGG. SURFACING
T 145+39.7	RT	T 145+41.7	RT	3.8	0.58	0.1	DRIVEWAY
T 145+40.7	RT	EM 10+40.0	RT	434.0	0.42	6.7	
T 145+40.7	RT	T 145+63.9	RT	173.8	0.42	2.7	UNDER EXP. AGG. SURFACING
T 145+56.6	LT	T 145+76.1	LT	88.8	0.58	1.9	CURB RAMP PORTION
T 145+56.6	RT	T 145+76.1	RT	88.6	0.58	1.9	CURB RAMP PORTION
T 145+63.9	LT	T 145+68.9	LT	31.3	0.42	0.5	
T 145+68.9	LT	T 145+88.0	LT	177.2	0.42	2.8	UNDER EXP. AGG. SURFACING
T 145+68.9	RT	T 146+06.6	RT	368.9	0.42	5.7	UNDER EXP. AGG. SURFACING
T 145+92.6	LT	T 146+09.9	LT	134.2	0.42	2.1	UNDER EXP. AGG. SURFACING
T 146+06.6	RT	EN 10+38.0	RT	95.1	0.58	2.1	CURB RAMP PORTION
T 146+09.9	LT	T 146+32.7	LT	191.0	0.58	4.1	DRIVEWAY
EN 10+40.0	LT	T 147+13.3	RT	423.5	0.42	6.5	
EN 10+38.2	LT	T 146+43.0	RT	98.6	0.58	2.1	CURB RAMP PORTION
T 146+41.5	LT	T 146+66.6	LT	200.4	0.42	3.1	UNDER EXP. AGG. SURFACING
T 146+74.6	LT	T 147+57.4	LT	823.4	0.42	12.8	UNDER EXP. AGG. SURFACING
T 147+13.3	RT	T 147+25.1	RT	58.9	0.58	1.3	DRIVEWAY
T 147+20.9	LT	H 9+60.0	RT	226.9	0.42	3.5	
T 147+25.1	RT	T 147+41.5	RT	82.4	0.42	1.3	
T 147+57.4	LT	H 9+62.0	RT	95.1	0.58	2.1	CURB RAMP PORTION
T 147+76.5	RT	T 148+06.5	RT	147.0	0.42	2.3	
H 9+60.0	LT	T 148+07.5	LT	114.9	0.42	1.8	
H 9+62.1	LT	T 147+93.8	LT	94.2	0.58	2.0	CURB RAMP PORTION
T 147+93.8	LT	T 148+41.5	LT	499.5	0.42	7.8	UNDER EXP. AGG. SURFACING
T 148+49.5	LT	T 148+63.1	LT	98.2	0.42	1.5	UNDER EXP. AGG. SURFACING
T 148+61.2	RT	T 148+86.1	RT	175.0	0.42	2.7	
T 148+63.1	LT	T 148+73.6	LT	103.8	0.58	2.2	DRIVEWAY
T 148+73.6	LT	T 149+03.0	LT	209.9	0.42	3.3	UNDER EXP. AGG. SURFACING
T 148+84.5	LT	T 149+03.0	LT	95.4	0.42	1.5	
T 149+03.0	LT	T 149+25.4	LT	115.3	0.58	2.5	DRIVEWAY
SA 10+40.3	LT	T 149+75.2	RT	340.9	0.42	5.3	
SA 10+38.3	LT	T 149+27.2	RT	96.6	0.58	2.1	CURB RAMP PORTION

ISSUED	MAY, 2014
CHECKED	PJP
DRAWN	SAB / OAR
DESIGN	BRH
SCALE	AS NOTED
T.A. PROJECT NUMBER	19425.00

NO.	REVISION	BY	DATE

PROJECT TITLE

THURSTON ROAD REVITALIZATION PROJECT

DRAWING TITLE

MISCELLANEOUS TABLES

CONC SIDEWALK

DRAWING NO.

37A1 / 72

Department of Environmental Services
Architecture and Engineering Services
City of Rochester, New York

MANAGING ENGINEER: ALBERT J.KIRCH,P.E.
CITY ENGINEER: JAMES R.McINTOSH,P.E.

ERDMAN ANTHONY

PROJECT MANAGER: P. PRESUTTI
DRAWN BY: S. BEAMAN / D. BELLS

CONCRETE SIDEWALK TABLE (CONT'D)

ITEM R608.12 - CONCRETE SIDEWALKS AND DRIVEWAYS							
BEGIN STATION	SIDE	END STATION	SIDE	AREA (SF)	DEPTH (FT)	ITEM R608.12 (CY)	COMMENTS
T 149+25.4	LT	T 149+89.5	LT	359.6	0.42	5.5	
T 149+27.2	RT	T 149.48.3	RT	224.4	0.42	3.5	UNDER EXP. AGG. SURFACING
T 149+41.0	RT	T 149+60.5	RT	88.8	0.58	1.9	CURB RAMP PORTION
T 149+41.3	LT	T 149+60.2	LT	88.4	0.58	1.9	CURB RAMP PORTION
T 149+53.3	RT	T 149+82.4	RT	280.0	0.42	4.4	UNDER EXP. AGG. SURFACING
T 149+90.4	RT	T 150+20.6	RT	242.5	0.42	3.8	UNDER EXP. AGG. SURFACING
T 150+28.6	RT	T 150+56.2	RT	220.6	0.42	3.4	UNDER EXP. AGG. SURFACING
T 150+29.9	RT	T 150+39.9	RT	97.9	0.42	1.5	
T 150+64.2	RT	T 150+84.2	RT	145.5	0.42	2.3	UNDER EXP. AGG. SURFACING
T 150+80.7	RT	T 151+00.2	RT	138.6	0.58	3.0	DRIVEWAY
T 150+99.5	LT	T 151+80.5	LT	51.0	0.42	0.8	
T 151+60.8	RT	T 151+80.5	RT	148.8	0.42	2.3	UNDER EXP. AGG. SURFACING
T 151+74.2	RT	T 151+79.2	RT	25.0	0.42	0.4	
T 151+88.5	RT	T 152+04.0	RT	110.0	0.42	1.7	UNDER EXP. AGG. SURFACING
T 152+04.2	RT	T 152+09.2	RT	25.0	0.58	0.5	DRIVEWAY
T 152+04.5	LT	T 152+14.5	LT	50.0	0.42	0.8	
T 152+25.7	RT	T 152+43.8	RT	121.7	0.42	1.9	UNDER EXP. AGG. SURFACING
F 10+46.9	LT	T 153+32.6	RT	435.7	0.42	6.7	
F 10+38.3	LT	T 152+85.1	RT	96.6	0.58	2.1	CURB RAMP PORTION
T 152+82.7	LT	T 152+94.1	LT	109.3	0.42	1.7	UNDER EXP. AGG. SURFACING
T 152+85.1	RT	T 152+94.0	RT	52.3	0.42	0.8	UNDER EXP. AGG. SURFACING
T 152+86.8	LT	T 153+06.3	LT	88.8	0.58	1.9	CURB RAMP PORTION
T 152+87.3	RT	T 153+06.3	RT	96.1	0.58	2.1	CURB RAMP PORTION
T 152+99.0	RT	T 153+42.4	RT	372.2	0.42	5.8	UNDER EXP. AGG. SURFACING
T 152+99.0	LT	T 153+10.4	LT	109.3	0.42	1.7	UNDER EXP. AGG. SURFACING
T 153+10.4	LT	RA 9+60.5	RT	259.9	0.42	4.0	
T 153+38.0	LT	T 153+50.7	LT	119.3	0.42	1.9	UNDER EXP. AGG. SURFACING
T 153+50.7	LT	RA 9+62.3	RT	96.7	0.58	2.1	CURB RAMP PORTION
T 153+50.4	RT	T 153+71.8	RT	151.4	0.42	2.4	UNDER EXP. AGG. SURFACING
T 153+66.1	RT	T 154+21.1	RT	275.0	0.42	4.2	
T 153+79.8	RT	T 153+96.0	RT	111.5	0.42	1.7	UNDER EXP. AGG. SURFACING
RA 9+58.0	LT	T 154+37.9	LT	327.0	0.42	5.0	
RA 9+62.4	LT	T 153+88.4	LT	96.8	0.58	2.1	CURB RAMP PORTION
T 153+88.4	LT	T 154+55.8	LT	621.8	0.42	9.7	UNDER EXP. AGG. SURFACING
T 154+56.3	RT	T 154+66.3	RT	50.0	0.42	0.8	
T 154+76.1	LT	T 155+06.1	LT	153.0	0.42	2.4	
T 154+77.3	LT	T 154+92.3	LT	94.6	0.42	1.5	UNDER EXP. AGG. SURFACING
T 155+00.4	LT	T 155+17.2	LT	116.4	0.42	1.8	UNDER EXP. AGG. SURFACING
T 155+16.3	RT	T 155+31.3	RT	75.0	0.58	1.6	DRIVEWAY
T 155+25.6	LT	T 155+36.2	LT	62.3	0.42	1.0	UNDER EXP. AGG. SURFACING
T 155+63.6	RT	AN 10+44.8	RT	352.9	0.42	5.4	
T 155+84.8	LT	T 155+96.7	LT	59.5	0.58	1.3	DRIVEWAY
T 156+06.5	RT	AN 10+38.1	RT	95.1	0.58	2.1	CURB RAMP PORTION
T 155+96.7	LT	T 156+53.5	LT	284.0	0.42	4.4	
T 156+29.3	LT	T 156+57.2	LT	287.0	0.42	4.5	UNDER EXP. AGG. SURFACING
AN 10+44.8	LT	T 156+58.6	RT	211.6	0.42	3.3	
AN 10+38.1	LT	T 156+45.3	RT	95.1	0.58	2.1	CURB RAMP PORTION
T 156+45.3	RT	T 156+94.4	RT	555.4	0.42	8.6	UNDER EXP. AGG. SURFACING
T 156+57.2	LT	L 9+60.9	RT	84.0	0.58	1.8	CURB RAMP PORTION
T 156+87.1	RT	T 157+06.5	RT	91.7	0.58	2.0	CURB RAMP PORTION
T 156+94.4	RT	T 156+99.4	RT	34.4	0.42	0.5	

CONCRETE SIDEWALK TABLE (CONT'D)

ITEM R608.12 - CONCRETE SIDEWALKS AND DRIVEWAYS							
BEGIN STATION	SIDE	END STATION	SIDE	AREA (SF)	DEPTH (FT)	ITEM R608.12 (CY)	COMMENTS
T 156+99.4	RT	T 157+13.5	RT	131.0	0.42	2.0	UNDER EXP. AGG. SURFACING
L 9+63.4	LT	T 157+04.0	LT	236.4	0.42	3.6	
T 157+18.0	RT	T 157+28.0	RT	50.0	0.42	0.8	
T 157+20.9	RT	T 157+49.5	RT	229.3	0.42	3.6	UNDER EXP. AGG. SURFACING
T 157+57.8	RT	T 157+70.9	RT	105.2	0.42	1.6	UNDER EXP. AGG. SURFACING
T 157+79.3	RT	T 157+93.5	RT	114.8	0.42	1.8	UNDER EXP. AGG. SURFACING
T 158+01.9	RT	T 158+39.5	RT	302.8	0.42	4.7	UNDER EXP. AGG. SURFACING
T 158+03.0	RT	T 158+13.0	RT	50.0	0.42	0.8	
T 158+47.8	RT	T 158+75.6	RT	224.3	0.42	3.5	UNDER EXP. AGG. SURFACING
T 158+73.0	RT	T 158+83.0	RT	50.0	0.42	0.8	
T 158+83.7	LT	T 158+93.7	LT	50.0	0.42	0.8	
T 158+84.0	RT	T 158+95.7	RT	92.6	0.42	1.4	UNDER EXP. AGG. SURFACING
T 159+13.0	RT	T 159+17.5	RT	35.8	0.42	0.6	UNDER EXP. AGG. SURFACING
T 159+13.0	RT	T 159+48.0	RT	175.0	0.42	2.7	
T 159+25.9	RT	T 159+46.0	RT	159.9	0.42	2.5	UNDER EXP. AGG. SURFACING
T 159+54.3	RT	T 159+63.8	RT	60.4	0.42	0.9	UNDER EXP. AGG. SURFACING
M1 10+37.9	RT	M1 10+41.9	RT	9.8	0.42	0.2	
T 160+07.2	RT	T 160+28.6	RT	158.7	0.42	2.5	UNDER EXP. AGG. SURFACING
T 160+37.0	RT	T 160+80.4	RT	348.9	0.42	5.4	UNDER EXP. AGG. SURFACING
T 160+40.8	RT	T 160+45.8	RT	25.0	0.42	0.4	
T 160+55.8	LT	T 160+65.8	LT	50.0	0.42	0.8	
T 160+88.0	RT	T 161+31.3	RT	337.2	0.42	5.2	UNDER EXP. AGG. SURFACING
T 161+00.8	LT	T 161+15.8	LT	75.0	0.42	1.2	
T 161+39.6	RT	T 161+53.2	RT	103.1	0.42	1.6	UNDER EXP. AGG. SURFACING
T 161+45.8	LT	T 161+55.8	LT	50.0	0.42	0.8	
T 161+66.8	RT	T 162+42.0	RT	735.5	0.42	11.4	UNDER EXP. AGG. SURFACING
T 161+80.8	LT	RW 9+52.8	RT	352.8	0.42	5.4	
T 161+87.5	RT	T 161+92.5	RT	25.0	0.42	0.4	
T 162+12.5	RT	T 162+17.5	RT	25.0	0.42	0.4	
T 162+33.4	RT	RW 10+40.5	RT	89.5	0.42	1.4	
T 162+42.0	RT	RW 10+39.0	RT	94.4	0.58	2.0	CURB RAMP PORTION
RW 9+59.3	LT	T 163+66.3	LT	528.3	0.42	8.2	
RW 9+65.4	LT	T 162+71.8	LT	75.3	0.58	1.6	CURB RAMP PORTION
T 162+71.8	LT	T 162+87.8	LT	133.2	0.42	2.1	UNDER EXP. AGG. SURFACING
T 162+80.6	LT	T 163+00.9	LT	93.3	0.58	2.0	CURB RAMP PORTION
T 162+92.8	LT	T 163+16.9	LT	265.2	0.42	4.1	UNDER EXP. AGG. SURFACING
RW 10+40.5	LT	T 163+52.4	RT	534.5	0.42	8.2	
RW 10+39.0	LT	T 162+77.1	RT	94.4	0.58	2.0	CURB RAMP PORTION
T 162+81.1	RT	T 162+95.8	RT	74.9	0.58	1.6	CURB RAMP PORTION
						517.8	

DRAWING TITLE	MISCELLANEOUS TABLES CONC SIDEWALK
DRAWING NO.	38A1 / 72
ISSUED	MAY, 2014
CHECKED	PJP
DRAWN	SAB / DAB
DESIGN	BRN
SCALE	AS NOTED
EA PROJECT NUMBER	19425.00
NO.	
REVISION	
BY	
DATE	

PROJECT TITLE
THURSTON ROAD
REVITALIZATION
PROJECT

Department of Environmental Services
Architecture and Engineering Services
City of Rochester, New York

MANAGING ENGINEER
ALBERT J.GIGLIO,P.E.

CITY ENGINEER
JAMES DANDINTOSH,P.E.

ERDMAN ANTHONY

PROJECT MANAGER
P. PRESUTTI

DRAWN BY
S. BEAMAN / D. WELLS

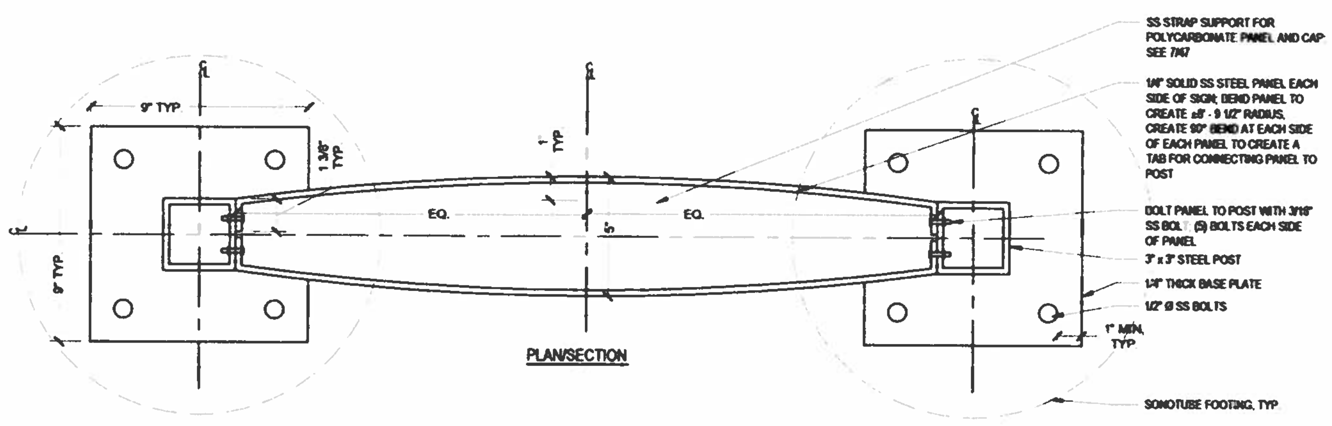

8 KIOSK / COMMUNITY BULLETIN BOARD - PLAN/SECTION ITEM 690 01000105
Scale: 3"=1'-0"

NOTES

1. BULLETIN BOARD IS DOUBLE SIDED
2. ACRYLIC PANEL AT TOP OF BULLETIN BOARD
   - TO BE FABRICATED FROM CHROMA XT MATERIAL AS PROVIDED BY 3FORM (www.3-form.com) OR APPROVED EQUIVALENT
   - COLOR TO BE CHROMA COBALT WITH A 3% WHITE OUT LAYER
   - ARTWORK ETCHING ON ACRYLIC PANELS TO BE A FOUR-TONE ETCHING DONE AS PER MANUFACTURER'S WRITTEN SPECIFICATIONS.
   - FABRICATION AND INSTALLATION OF ACRYLIC PANELS TO BE DONE AS PER MANUFACTURER'S WRITTEN INSTRUCTIONS.
   - PROVIDE A 6" x 12" SAMPLE OF ETCHED ACRYLIC PANEL, SHOWING FOUR-TONE ETCHING AT FULL-SCALE. LANDSCAPE ARCHITECT TO INDICATE WHICH PORTION OF ARTWORK TO BE PROVIDED IN THE SAMPLE.
3. STAINLESS STEEL SAMPLES:
   - PROVIDE A 24" x 24" SAMPLE OF STAINLESS STEEL PLATE SHOWING ARTWORK OF THE 19 GRAPHIC AT FULL SIZE. THE PURPOSE OF THE SAMPLE IS TO ASSESS FINISHES OF BACKGROUND AND ARTWORK.
   - PROVIDE 6"x6" SAMPLE OF EACH OTHER TYPE OF SS FINISH INCLUDING LETTER CUTOUTS AND POWDERCOATING.

MATERIALS AND FINISHES

- 1/4" THICK STAINLESS STEEL PLATE WITH SANDBLAST FINISH
- STAINLESS STEEL PLATE OR TUBE WITH RANDOM SCRATCH FINISH
- STAINLESS STEEL PLATE WITH DIRECTIONAL BRIGHT FINISH
- STAINLESS STEEL PLATE WITH POWDERCOAT FINISH
- COLORED ACRYLIC PANEL WITH ETCHED GRAPHICS

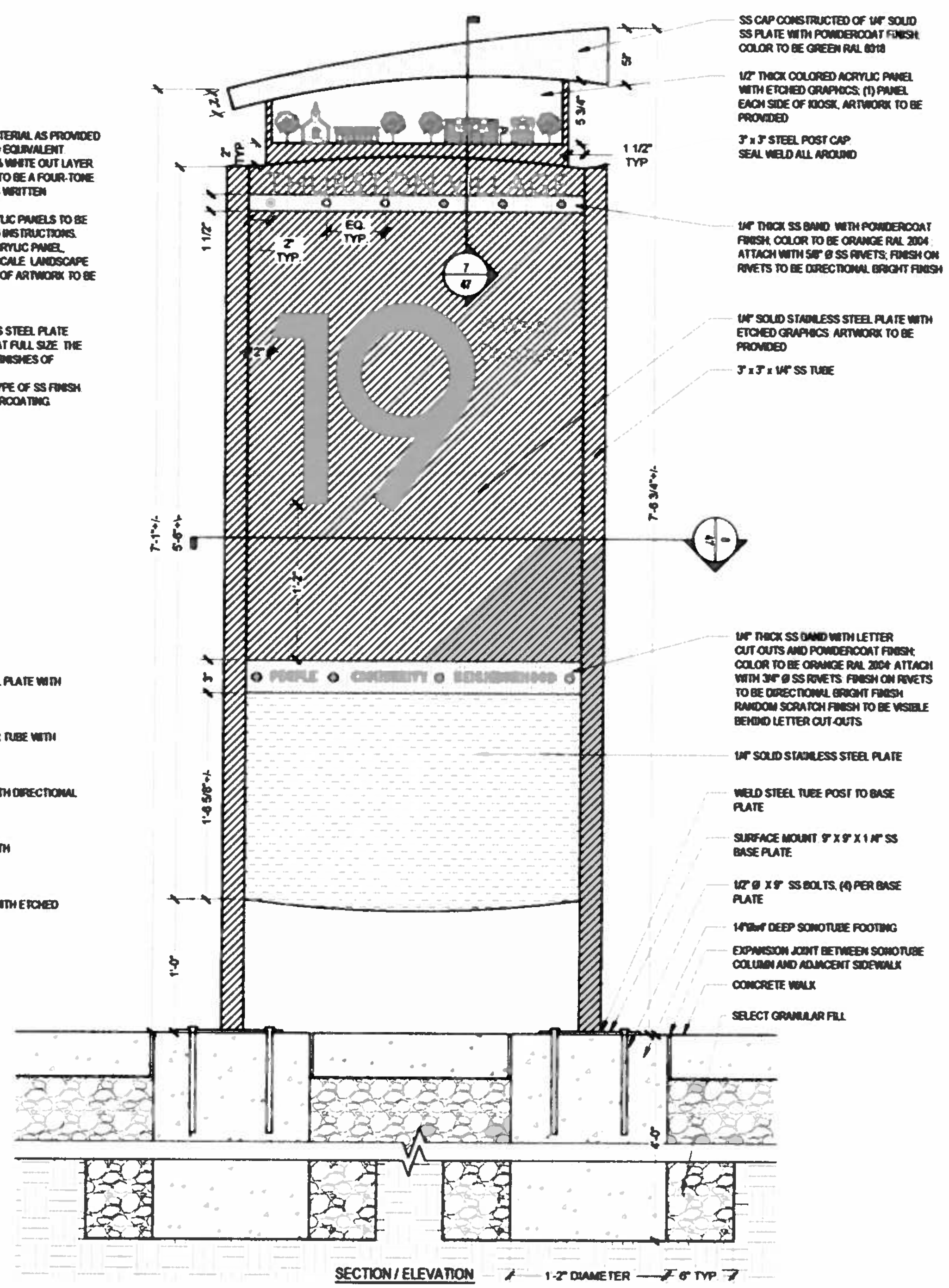

3 KIOSK / COMMUNITY BULLETIN BOARD - ITEM NO 690 01000105
Scale: 1-1/2"=1'-0"

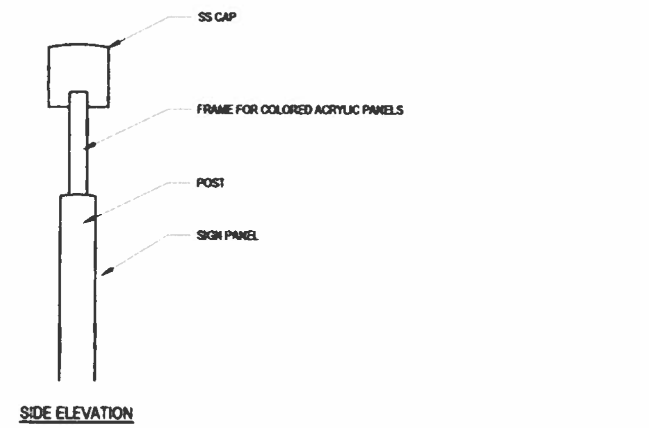

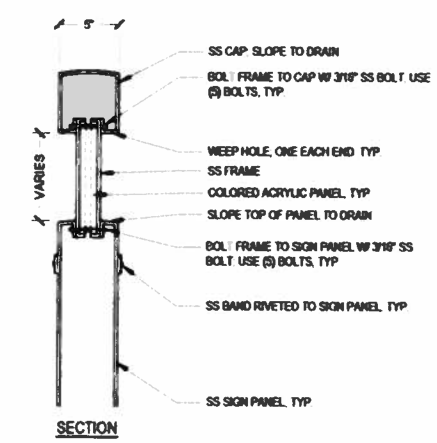

7 KIOSK / BULLETIN BOARD - SECTION / SIDE ELEVATION
Scale: 1-1/2"=1'-0"

NOTES ETCHED GRANITE PLAQUES

1. COLOR OF GRANITE TO BE BLACK
2. ALL IMAGES SHALL BE FOUR-TONE ETCHINGS
3. CONTRACTOR TO SUBMIT SCALED GRAPHIC MOCK-UPS OF EACH PLAQUE FOR APPROVAL PRIOR TO FABRICATION
4. CONTRACTOR TO SUBMIT SAMPLES AND SHOP DRAWINGS, INCLUDING MOUNTING DETAILS, FOR APPROVAL PRIOR TO FABRICATION.
5. SEE 3/43 AND 4/43 FOR MOUNTING DETAILS

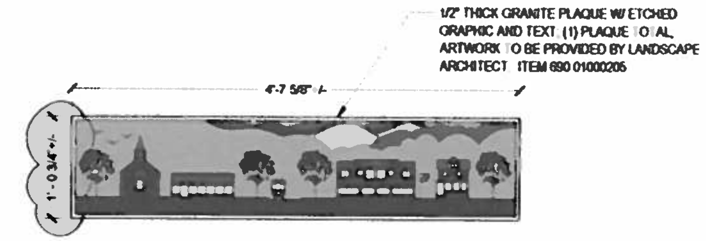

6 ETCHED GRANITE PLAQUE FOR SEATWALL - ITEM NO 690 01000205
Scale: 1"=1'-0"

SAMPLE ARTWORK

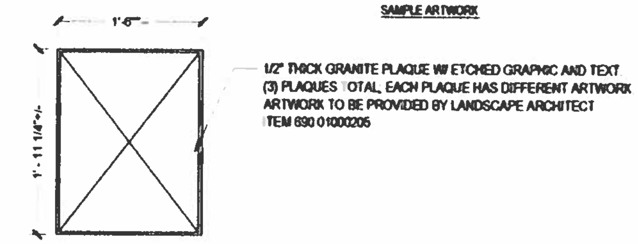

5 ETCHED GRANITE PLAQUE FOR COLUMN - ITEM NO 690 01000205
Scale: 1"=1'-0"

NOTE

1. BIKE RACK TO BE MAGLIN MBR200-S SERIES FINISH: BLACK POWDERCOAT
2. CAST THE FOLLOWING INTO THE RACK AS PER CITY OF ROCHESTER STANDARDS
   - LOCK BICYCLE TO POST
   - 19TH WARD

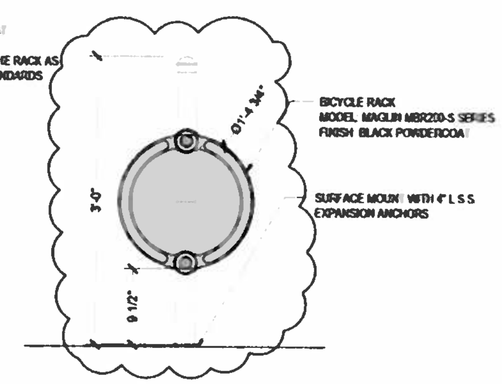

4 SURFACE MOUNTED BICYCLE RACK - ITEM NO 615 27020010
Scale: 1"=1'-0"

NOTE

1. BACKLESS BENCH TO BE DUMOR 92 SERIES STEEL BENCH LENGTH: 6' FINISH: BLACK POWDERCOAT

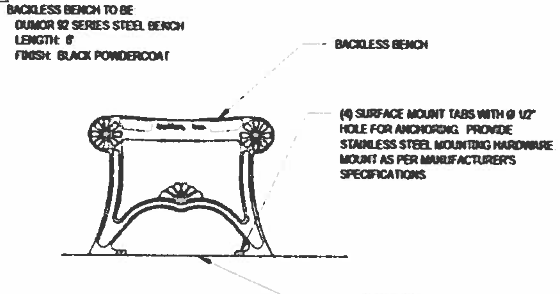

2 SURFACE MOUNTED BACKLESS BENCH - ITEM NO 615 08010005
Scale: 1"=1'-0"

NOTE

1. BACKED BENCH TO BE DUMOR 58 SERIES STEEL BENCH LENGTH: 6' FINISH: BLACK POWDERCOAT

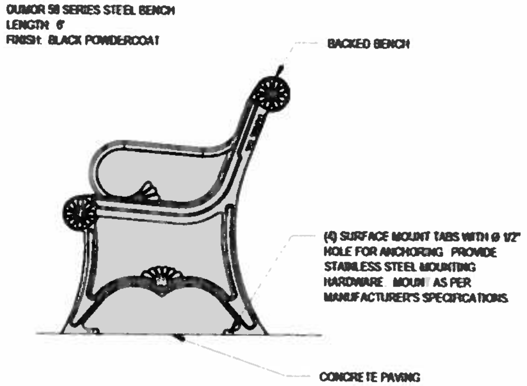

1 SURFACE MOUNTED BACKED BENCH - ITEM NO 615 08020005
Scale: 1"=1'-0"

IWLA

Department of Environmental Services
Architecture and Engineering Services
City of Rochester, New York

MANAGING ENGINEER ALBERT J. GIGLIO, P.E.
CITY ENGINEER JAMES R. McINTOSH, P.E.

PROJECT TITLE
THURSTON ROAD REVITALIZATION PROJECT

ISSUED	JUNE 2, 2014		ADDENDUM		6/23/14
CHECKED	KAM/KAW				
DRAWN	ARM				
DESIGN	ARM				
SCALE	AS NOTED				
LA PROJECT NUMBER	19425.00	NO.	REVISION	BY	DATE

DRAWING TITLE
SITE DETAILS

DRAWING NO.
47A1

72